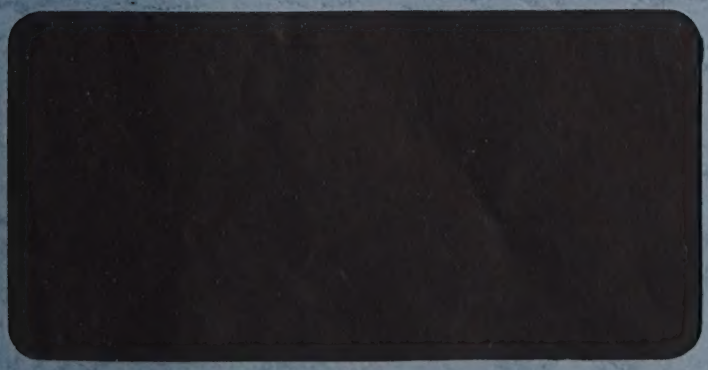

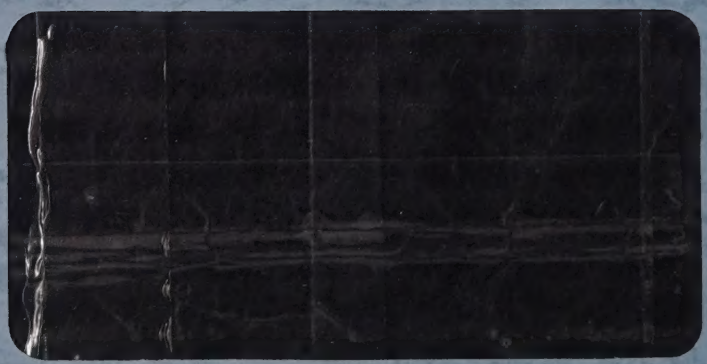

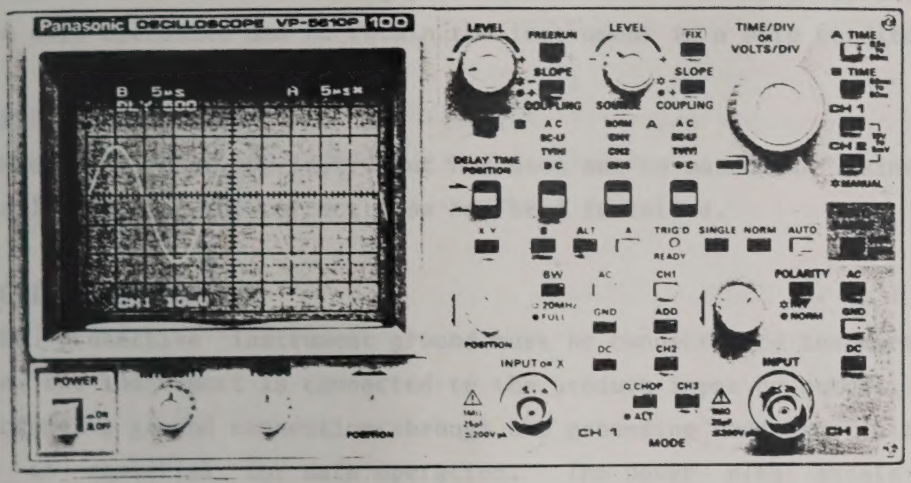

Models VP-5610A and VP-5610P are identical except indication of "A" or "P". The model name VP-5610P appears in manual should be read as VP-5610A.

OSCILLOSCOPE

VP-5610A

SERVICE MANUAL

SAFETY PRECAUTIONS

GENERAL

This instrument has been designed and tested to ensure reasonable protection of personnel and the surrounding area and has been delivered in a safe condition. The following precautions must be observed by the user to ensure safe operation and to retain the instrument in a safe condition.

BEFORE SUPPLYING POWER

Make sure that the instrument has been set to match the mains voltage available and that the correct fuse has been installed.

PROTECTIVE EARTH GROUND

The protective instrument ground must be connected to the earth ground before the instrument is connected to the product input or output terminal. A protective ground connection through the grounding conductor in the power cable is essential for safe operation. The power plug should only be inserted into an outlet provided with a protective earth contact.

SAFETY SYMBOLS

Operation manual symbol:
This symbol indicates when it is necessary for the user to refer to the Operation Manual for safety instructions.

High voltage symbol:
This symbol indicates a dangerous voltage exceeding 1 kV.

Protective earth ground terminal.

WARNING The WARNING heading indicates instructions that should be followed to avoid fires and dangers to personnel.

CAUTION The CAUTION heading indicates instructions that should be followed to avoid damage or destruction of the instrument.

POWER SOURCE

This instrument is intended to operate from a mains supply that will not be more than 250 Vrms. For suitable voltage selection, see SECTION 3 of the Operation Manual.

HAZARDS ARISING FROM LOSS OF GROUND

The earth ground protection must not be defeated by the use of an extension cord without a protective conductor. If an autotransformer is used for voltage reduction, make sure that the common terminals are connected to the earth terminal of the power source.

DAMAGE DURING TRANSPORT OR STORAGE

It is likely that the protection has been impaired as a result of damage caused by abnormal stresses during transport or storage--for example--the instrument shall be made inoperative and be secured against inadvertent operation.

USE OF PROPER FUSE

Use only the fuse of the correct type, voltage, rating and current rating as specified in SECTION 3 of the Operation Manual.

REMOVAL OF COVERS

Removal of covers is likely to expose live parts although reasonable protections have been taken in the design of the instrument to shield such parts. The instrument shall be disconnected from a mains supply before carrying out any adjustment, replacement, maintenance, or repair requiring such removal. If adjustment, maintenance, or repair requires energizing the instrument, it shall only be carried out by qualified personnel aware of the possible hazards involved.

DO NOT OPERATE IN EXPLOSIVE ATMOSPHERES

Do not operate the instrument in an explosive atmosphere. It may trigger an explosion.

TABLE OF CONTENTS

1. GENERAL

1.1 DESCRIPTION 1-1

1.2 CONTENTS OF THIS MANUAL 1-1

2. SPECIFICATIONS

2.1 VERTICAL AXIS (CH1, CH2, CH3) 2-1

2.2 HORIZONTAL AXIS (A and B triggering) 2-3

2.3 HORIZONTAL AXIS (Timebase--Main A sweep and delayed B sweep) 2-4

2.4 SWEEP DELAY 2-5

2.5 X-Y OPERATION (CH1--X, CH2--Y, CH3--Y) 2-5

2.6 Z AXIS 2-6

2.7 CALIBRATOR 2-6

2.8 POWER SUPPLY 2-7

2.9 CRT 2-7

2.10 ENVIRONMENTAL CHARACTERISTICS 2-7

2.11 PHYSICAL CHARACTERISTICS 2-8

2.12 ACCESSORIES PROVIDED 2-8

3. INSTALLATION

3.1 POWER REQUIREMENT 3-1

3.2 FUSE 3-1

3.3 POWER CABLE 3-1

3.4 MOUNTING CONSIDERATIONS 3-2

3.5 INTERCONNECTION WITH OTHER EQUIPMENT 3-2

3.6 BATTERY REPLACEMENT 3-2

3.7 INITIALIZATION FROM FAULTY SETTING 3-3

4. OPERATION

4.1 GENERAL 4-1

4.2 PREPARATIONS 4-1

4.2.1 Intensity 4-1

4.2.2 Trace gradient 4-1

4.2.3 Scale illumination 4-1

4.2.4 Intensity modulation (Z axis) 4-1

4.2.5 Calibrator 4-2
4.3 CONTROLS AND CONNECTORS 4-2
4.4 OPERATION OF VERTICAL AND HORIZONTAL SECTIONS 4-15
4.4.1 Mode switch 4-15
4.4.2 Input signal connections 4-17
4.4.3 Input coupling 4-18
4.4.4 Deflection coefficient 4-18
4.4.5 Bandwidth limiter 4-19
4.4.6 Trigger and related operations 4-19
4.4.6.1 Trigger source switch group 4-19
4.4.6.2 Trigger signal coupling switch groups 4-20
4.4.6.3 SLOPE +, - 4-20
4.4.6.4 level controls 4-21
4.4.6.5 HOLDOFF control 4-21
4.4.7 Sweep and related operations 4-22
4.4.7.1 A sweep mode 4-22
4.4.7.2 Sweep time settings 4-23
4.4.7.3 Sweep magnification 4-24
4.4.7.4 Delayed B sweep 4-24
4.4.7.5 B sweep triggering level 4-25
4.4.7.6 Alternate sweep 4-26
4.4.7.7 TV(V), TV(H) 4-26
4.4.7.8 X-Y operation 4-27
4.5 AUTO RANGE 4-28
4.5.1 GENERAL 4-28
4.5.2 THEORY OF OPERATION 4-28
4.5.3 AUTO RANGE OPERATION 4-29
4.5.3.1 Preparation 4-29
4.5.3.2 Range switching point 4-30
4.5.3.3 Starting AUTO RANGE operation 4-30
4.5.3.4 Auto ranging and trigger source in multi-trace display 4-31
4.5.3.5 Changing settings and displaying the B sweep 4-31
4.5.3.6 Semi-auto ranging 4-32
4.5.3.7 Cancelling the auto ranging mode 4-32
4.5.3.8 Notes 4-32

4.6 VP-5610P GP-IB INTERFACE VQ-051F (OPTION) 4-33
4.6.1 General 4-33
4.6.2 Part composition 4-34
4.6.3 Remote controllable functions 4-35
4.6.4 Functions independent from remote control 4-37
4.6.5 GP-IB address setting 4-37
4.6.6 VQ-051F installation 4-38
4.6.6.1 GP-IB board installation 4-38
4.6.7 Slide switch installation 4-41
4.6.7.1 Installation procedure 4-41
4.6.8 Connector cable (1) installation 4-44
4.6.9 GP-IB board installation 4-46
4.6.10 GP-IB operation check 4-47
4.6.11 GP-IB circuit description 4-50

5. CIRCUIT DESCRIPTION
5.1 GENERAL 5-1
5.2 DETAILED CIRCUIT DESCRIPTION 5-6
5.2.1 CH1 and CH2 attenuators 5-6
5.2.1.1 Input coupling 5-6
5.2.1.2 Input attenuator 5-7
5.2.1.3 Input buffer amplifier 5-9
5.2.2 Vertical preamplifier 5-9
5.2.2.1 CH1 preamplifier 5-9
5.2.2.2 Position 5-11
5.2.2.3 CH2 polarity 5-11
5.2.2.4 Vertical switching and chop blanking circuits 5-11
5.2.2.5 Delay line driver 5-14
5.2.2.6 Delay line 5-14
5.2.3 Vertical main amplifier 5-14
5.2.3.1 Bandwidth limiter 5-15
5.2.3.2 Separation and character superpose circuits 5-17
5.2.4 Trigger circuit 5-18
5.2.4.1 Vertical trigger signal amplifier 5-18
5.2.4.2 Diode gate for trigger signal 5-20
5.2.4.3 A and B trigger circuits 5-20
5.2.4.4 Trigger signal amplifier 5-22

5.2.4.5 Trigger slope 5-23
5.2.5 Sweep circuit 5-23
5.2.5.1 A sweep generator 5-23
5.2.5.2 B sweep generator 5-24
5.2.5.3 Timing circuit for A and B sweep 5-25
5.2.5.4 A sweep 5-27
5.2.5.5 ALT sweep 5-27
5.2.5.6 B sweep gate 5-27
5.2.6 Z axis circuit 5.27
5.2.6.1 Z axis driver 5-27
5.2.6.2 Z axis amplifier 5-28
5.2.6.3 X-Y amplifier 5-28
5.2.7 Horizontal amplifier 5-29
5.2.7.1 Horizontal preamplifier 5-29
5.2.7.2 Horizontal main amplifier 5-30
5.2.8 AUTO RANGE circuit 5-31
5.2.8.1 Vertical auto range circuit 5-31
5.2.8.2 Horizontal auto range circuit 5-33
5.2.9 Character generator 5-34
5.2.10 Microprocessor 5-37
5.2.10.1 Microprocessor circuit 5-37
5.2.10.2 Power on sequence 5-37
5.2.10.3 Power down sequence 5-37
5.2.10.4 Microprocessor and I/O ports 5-39
5.2.10.5 Output port with serial input data and parallel output 5-39
5.2.10.6 Output port with parallel input and output data ... 5-41
5.2.10.7 Input port with parallel input data and serial output 5-41
5.2.10.8 Input port with parallel input and output data 5-41
5.2.11 Front panel control circuit 5-43
5.2.11.1 Key switches 5-43
5.2.11.2 Key switch LEDs 5-43
5.2.12 Calibrator voltage generator 5-44
5.2.13 CRT circuit 5-44
5.2.13.1 High-voltage oscillator and controller 5-44
5.2.13.2 High-voltage circuit 5-46

5.2.14 Power circuit 5-47

6. ADJUSTMENT

6.1 MAINTENANCE 6-1
6.2 PREPARATION 6-2
6.3 TEST EQUIPMENT REQUIRED 6-3
6.3.1 Printed circuit board configuration 6-4

6.4 POWER SUPPLY AND CRT CIRCUIT ADJUSTMENTS 6-10
6.4.1 WAVE adjustment 6-10
6.4.2 +5 V and -8.6 V adjustment 6-10
6.4.3 TRACE ROTATION 6-11
6.4.4 High-voltage adjustment 6-11
6.4.5 FOCUS 6-11
6.4.6 ASTIGMATISM 6-11
6.4.7 CRT BIAS 6-11
6.4.8 CALIBRATOR 6-13

6.5 VERTICAL 6-13
6.5.1 DC LEVEL 6-13
6.5.2 VARIABLE BALANCE 6-14
6.5.3 POSITION CENTER 6-14
6.5.4 AC GAIN 6-15
6.5.5 CH1 and CH2 VARIABLE adjustments 6-15
6.5.6 5 mV/div GAIN adjustment 6-15
6.5.7 CHOP crosstalk 6-16
6.5.8 DC SHIFT 6-16
6.5.9 CH2 SIGN OUT GAIN 6-16
6.5.10 CH2 SIGN OUT DC LEVEL 6-17
6.5.11 Input capacitance adjustment 6-17
6.5.12 Square-wave characteristics adjustment 6-17
6.5.12.1 Low-frequency characteristics 6-17
6.5.12.2 High-frequency characteristics 6-18
6.5.13 Attenuator adjustment 6-20
6.5.14 ADD common-mode rejection ratio 6-21
6.5.15 Crosstalk check 6-21

6.5.16 Attenuator interference 6-22
6.5.17 CH3 GAIN 6-22
6.5.18 CH3 POSITION CENTER 6-22
6.5.19 CH3 attenuator adjustment 6-23
6.5.20 CH3 square-wave adjustment 6-24
6.5.21 Other checks 6-24
6.5.21.1 UNCAL operation check 6-24
6.5.21.2 Bandwidth limit switch 6-25
6.5.21.3 CHOP, ALT and ADD operation checks 6-25
6.5.21.4 Trigger mode checks 6-25
6.5.21.5 ALT triggering check 6-25

6.6 HORIZONTAL
6.6.1 Trigger level centering 6-25
6.6.2 Trigger DC level 6-27
6.6.3 CH3 trigger DC level 6-27
6.6.4 NORM trigger DC level 6-27
6.6.5 FIX triggering check 6-28
6.6.6 NORM GAIN adjustment 6-28
6.6.7 MAG GAIN 6-28
6.6.8 MAG REG 6-29
6.6.9 A SWEEP TIME 6-29
6.6.10 B SWEEP TIME GAIN 6-29
6.6.11 B SWEEP TIME 6-31
6.6.12 A/B POSITION 6-31
6.6.13 DELAY START and DELAY STOP adjustments 6-31

6.7 X-Y OPERATION ADJUSTMENT
6.7.1 X POSITION CENTER 6-32
6.7.2 X GAIN 6-33
6.7.3 X-Y PHASE 6-33

6.8 DIGITAL DISPLAY
6.8.1 Vertical gain and position adjustments 6-34
6.8.2 Horizontal gain and position adjustments 6-35

6.9 AUTO RANGE ADJUSTMENT
6.9.1 CH1 auto range 6-35
6.9.2 CH2 auto range 6-38
6.9.3 Horizontal AUTO RANGE operation check 6-38

6.10 SOFTWARE CHECK
6.10.1 Initial setting when power is turned on 6-39
6.10.2 Battery backup 6-39
6.10.3 Setting for delivery 6-39

7. PARTS LIST

8. CIRCUIT DIAGRAM

1. GENERAL

1.1 DESCRIPTION

The VP-5610P Oscilloscope is a 3-channel, 6-trace, 100 Mhz, compact oscilloscope featuring a rectangular internal graticule CRT. The VP-5610P has not only a 100-MHz bandwidth oscilloscope functions, but also an auto ranging function for both X and Y axes making waveform observa-tions of unknown signals simple and easy.

The maximum sensitivity of the vertical axis is 5 mV/div and the maximum time coefficient of the horizontal axis sweep is 5 ns/div. The Auto Fix triggering mode provides stable waveform measurements and the holdoff function allows easy triggering of even complicated signals such as the aperiodic signal.

The three channels are designated as CH1 - X, CH2 - Y, and CH3 - Y for the two-channel X-Y operation. The switching regulator allows operation on a wide power source voltage ranges from 90 V through 250 V. DC operation is optionally available.

The VP-5610P is the first in its class as a compact oscilloscope to feature an alphanumeric CRT display of scale factors and delay time parameter.

1.2 CONTENTS OF THIS MANUAL

The VP-5610P specifications are described in Section 2. Section 3 describes the instrument installation and preparation, and offers a few safety tips. For a complete summary of safety considerations, see the safety precautions listed on the front of this Manual. Operation instructions together with descriptions on the AUTO RANGE function are provided in Section 4. In Section 5, adjustment procedures are provided. In Sections 6 and 7, Parts List and Circuit Diagrams are attached.

2. SPECIFICATIONS

2.1 VERTICAL AXIS (CH1, CH2, CH3)

- Deflection coefficients (CH1, CH2)

  5 mV/div to 10 V/div

  11 calibrated ranges in a 1-2-5 sequence VOLTS/DIV display
- Error limits

  ±2% at +10°C to +35°C

  ±4% at 0°C to +50°C

  When calibrated correctly at 5 mV/div with the VAR control at the fully clockwise position.
- Uncalibrated variable range

  Continuously variable between VOLTS/DIV settings. Increases deflection factor by at least 2.5 to 1.
- Deflection coefficients (CH3)

  0.1 V/div, 0.5 V/div
- Error limits

  ±5%
- Position

  Controls vertical position of CH3 trace on CRT
- CH2 SIGNAL OUT

  25 mV/div ±10%
- Response frequency range and rise time

  CH2 SIGNAL OUT

  DC to 10 MHz or more (35 ns)

  CH1, CH2, 5 mV/div to 10 V/div

  DC to 100 MHz (3.5 ns)

  -3 dB bandwidth, DC coupled

  CH3, 0.1 V/div, 0.5 V/div

  DC to 100 MHz (3.5 ns)

  Measured with a 25Ω signal source with a 6-div amplitude VARIABLE position. CAL rise time is calculated with the formula below:

  Rise Time = 0.35/BW (in MHz)
- Input impedance

  1 MΩ, 25 pF for CH1 and CH2

- Max. input voltage

  200 V (DC + ACpeak), 10 seconds

  DC + AC peak, below 1 kHz

- Input coupling

  AC, DC and GND both for CH1 and CH2

- AC low-frequency response

  Approx. 4 Hz (-3 dB) with AC-GND-DC switch at AC position

- Vertical display modes

  CH1, CH2, CH3, CHOP, ALT and ADD

- Bandwidth limiter

  20 MHz or less

  -3 dB bandwidth

- Switching rate in CHOP mode

  500 kHz

- Attenuator interference

  5,000:1 from DC to 20 MHz

- Polarity inversion

  Polarity of CH2 may be inverted.

- Vertical linearity

  0.15 div or less for 50-kHz sinewave, compression or expansion of a 2-div trace (at the screen center) when it is shifted to the vertical extremes of the graticule area.

- Instability of the trace position

  Drift by temperature at 5 mV/div through 10 V/div: 0.1 div/°C or less

  Drift by operating hour at 5 mV/div to 10 V/div: 0.5 div/Hr or less

  After at least 15-minute warm up run

- Auto range function

  For channels 1 and 2, a range satisfying the set value is automatically selected based on the input signal level. Set value of 1, 2 or 3 is selectable and deflection specified with the 50-kHz sinewave as below:

  1 ..... 4 div

  2 ..... 6 div

  3 ..... 8 div

  The function is in action each time AUTO RANGE is turned on and the mode switches from freerun to triggered sweep.

- Operational frequency range

  200 Hz to 10 MHz

2.2 HORIZONTAL AXIS (A and B triggering)

- Trigger mode

  NORM, AUTO FIX

- Trigger coupling

  AC, DC-LF, TV, DC

  TV (V): A Triggering operation

  TV (H): B Triggering operation

- Trigger slope

  + or -

- Trigger threshold ranges in NORM mode

  The trigger threshold ranges for AC, DC-LF, DC and TV modes are shown in Table below:

	Frequency	Source
AC	30 Hz to 5 MHz	0.5 div
	30 Hz to 100 MHz	2.5 div
DC-LF	30 Hz to 100 MHz	0.6 div
DC	DC to 5 MHz	0.5 div
	DC to 100 MHz	2.5 div
TV	TV sync signal	1.0 div

Polarity of sync signal: Negative

- Trigger threshold in FIX mode (for A triggering only)

  The trigger threshold ranges for AC, DC-LF and DC modes are shown in Table below:

	Frequency	Source
AC	400 Hz to 5 MHz	1.0 div
	400 Hz to 100 MHz	3.5 div
DC-LF	400 Hz to 50 kHz	1.2 div
DC	400 Hz to 5 MHz	1.0 div
	DC to 100 MHz	3.5 div

Waveform with duty factor between 1:10 and 10:1 is triggerable.

- Trigger level area selectable
  ±4 div or more at 50 kHz sinewave
- AUTO sweep operation frequency
  50 Hz or more only for A sweep

2.3 HORIZONTAL AXIS (Timebase--Main A sweep and delayed B sweep)

- Time coefficients
  Main A sweep: 50 ns/div to 0.5 s/div
  22 calibrated ranges in a 1-2-5 sequence
  Delayed B sweep: 50 ns/div to 50 ms/div
  19 calibrated ranges in a 1-2-5 sequence
- Error limits

0.1 µs/div to 0.2 s/div:	±2% at +10°C through +35°C
	±4% at 0°C through +50°C
50 ns/div, 0.5 s/div:	±5% at +10°C through +35°C
	±7% at 0°C through +50°C

- Variable (A sweep only)
  1 : 2.5 or more
- Main A sweep modes
  AUTO, NORM, SINGLE
- Display modes
  A, ALT, B
- Single sweep
  Possible
- Holdoff
  Continuously variable
- Horizontal auto range
  For A sweep, a range satisfying the set value (AUTO RANGE HORIZ switch) is automatically selected based on the input frequency. A set value between 1 through 9 may be manually selected. 50-kHz sinewave is used to specify the suitable range. B sweep range is selected as ten times speed of A sweep. 50 ns/div is the maximum. Switches from freerun to triggered sweep every time AUTO RANGE is turned on.
- Operational frequency range
  200 Hz to 10 MHz

- Magnifier

  Magnification: Trace is magnified 10 times at screen center

  Max. effective time coefficient: 5 ns/div

  Error limits: Add ±1% to normal error limits.

  Within middle 8 div of screen. Exclude the first and last 50 ns.

- Linearity

  0.1 µs/div to 0.5 s/div: ±1.5% at +10°C to +35°C
  ±3% at 0°C to +50°C

  50 ns/div: ±3% at +10°C to +35°C
  ±4.5% at 0°C to +50°C

2.4 SWEEP DELAY

- Delay time

  Delay time range: Continuous from 5 s to 1 µs when A VARIABLE is set to CAL position

  Multiplier linearity

  0.1 s/div to 0.5 s/div: ±3% at +10°C to +35°C
  ±5% at 0°C to +50°C

  1 µs/div to 50 ms/div: ±2% at +10°C to +35°C
  ±4% at 0°C to +50°C

  Delay time position: 0.3 div to 10 div, Digital display of current delayed time factor on CRT (30 to 999, 1 div = 100)

  Jitter: 10,000 : 1

  A sweep: At 1 ms/div

  B sweep: At 1 µs/div

2.5 X-Y OPERATION (CH1--X, CH2--Y, CH3--Y)

- X-Y inputs

  CH1 input for X axis volts/div deflection, CH2 and CH3 for Y axis

  H POSITION for X axis, CH2 or CH3 POSITION for Y axis

- X and Y deflection coefficients

  CH1 and CH2: 5 mV/div to 10 V/div

  11 calibrated positions in a 1-2-5 sequence

  CH3: 0.1 V/div, 0.5 V/div

- Error limits
  ±5% at +10°C to +35°C
  ±6% at 0°C to +50°C
- X and Y frequency range
  DC to 1 MHz
- X and Y input impedance
  1 MΩ ±2%, 25 pF ±2 pF (Excluding CH3-Y)
- X and Y phase difference
  3° or less, DC to 1 MHz

2.6 Z AXIS

- Intensity modulation
  A +5V signal yields noticeable modulation at normal intensity.
- Frequency range
  DC to 20 MHz
- Input resistance
  Approx. 47 kΩ
- Max. input voltage
  50 V (DC + ACpeak), DC to 1 kHz

2.7 CALIBRATOR

- Waveform
  Square-wave of 40% to 60% duty factor
- Output voltage
  0.3 V
- Error limit
  ±1% at +10°C to +35°C
  ±1.5% at 0°C to +50°C
- Frequency
  1 kHz ±3%
- Rise time
  10 µs or less

2.8 POWER SUPPLY

- Mains voltage
  AC 90 V to 250 V
  Proper power supply cord and plug must be used.
- Mains frequency
  50 or 60 Hz
- Power consumption
  80 VA or less (45 W or less)

2.9 CRT

- Type
  Rectangular, internal graticule
- Total acceleration voltage
  Approx. 16 kV
- Measuring area
  8 x 10 div (1 div = 6.35 mm)

2.10 ENVIRONMENTAL CHARACTERISTICS

- Ambient temperature
  Operating temperature limit: 0°C to +50°C
  +10°C to +35°C for lower error limit
  Storage: -20°C to +70°C
- Humidity (R.H.)
  Operating humidity limit: 10% to 80%
  Storage: 0% to 80%
- Vibration
  No problem with 15-minute vibration along each of the three major axes at a total displacement of 0.6 mm peak-to-peak with frequency variation of 600-3300-600 r.p.m. in one-minute cycles.
- Shock
  No problem after 2 shocks of 30G (total 12 shocks), one-half sine, to each surface
- Drop test
  75 cm drop on each corner, edge or flat surface (total 10 drops) when packed in a shipping carton

2.11 PHYSICAL CHARACTERISTICS

• Dimensions

Overall: 140 x 245 x 415 mm or less (Hight x Width x Length)

Frame: 102 x 194 x 363 mm

Overall weight: Approx. 5 kg

Note: The above figures are without accessories. Overall dimensions include feet, handle and front switches and connectors.

2.12 ACCESSORIES PROVIDED

Soft carrying case:	1
Probe:	2
Front cover:	1
Viewing hood:	1
BNC adaptor:	2
Fuse 1.6 A (T):	1
Scale lamp:	1
Mains power cord:	1
Instruction manual:	1

3. INSTALLATION

3.1 POWER REQUIREMENT

The Model VP-5610P can be operated with any power source supplying from 100 V to 250 V, 50 or 60 Hz. Power consumption is less than 80 VA.

3.2 FUSE

Verify that the proper fuse is installed in the fuse holder. Ratings of the fuse are 250 V, 1.6 V (time lag) as noted on the rear panel.

WARNING

Make sure that only fuse with the required rated current and of the specified type is used for replacement. The use of makeshift fuse and the shortcircuiting of fuse holder are prohibited.

3.1 POWER CABLE

A detachable power cable assembly is provided with the VP-5610P. The type of the plug shipped with each instrument depends on the country of destination. The Figure below illustrates the power cable available with Matsushita part numbers

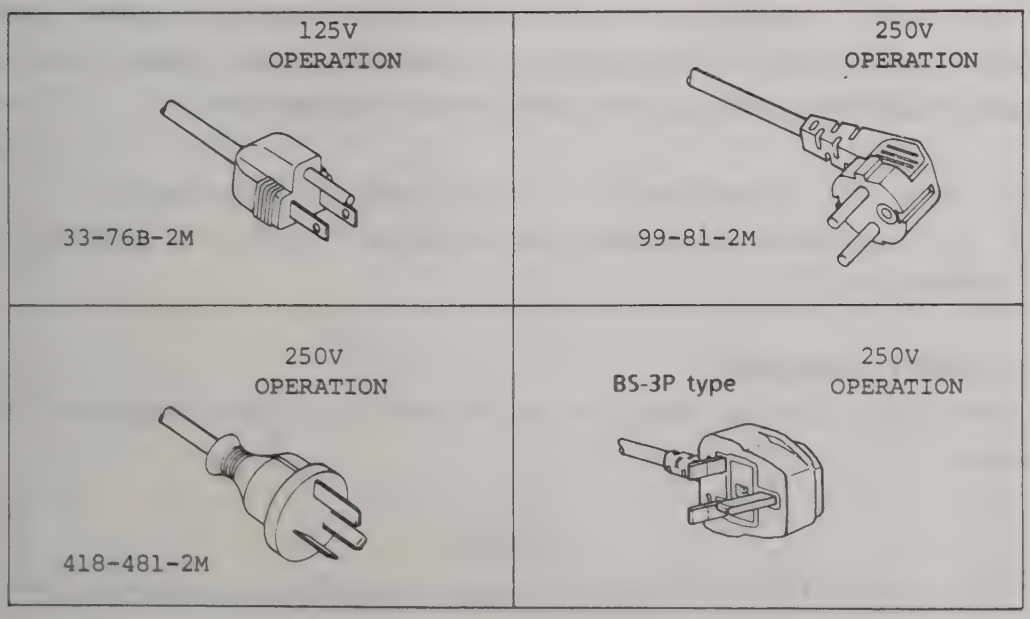

3.4 MOUNTING CONSIDERATIONS

The handle of the VP-5610P can be positioned for carrying or as a tilt-stand for the instrument. To position the handle, press in both pivots simultaneously and turn the handle to the desired position.

The instrument may also be stand on the rear feet either for operation or storage.

CAUTION

Since the VP-5610P is cooled by air through hoes on the top and bottom covers, the following cautions should be observed during the operation of the instrument.

1. Allow at least 3 cm clearance on both sides.
2. Do not interrupt the airflow from the holes on the top cover.

3.5 INTERCONNECTION WITH OTHER EQUIPMENT

Plug the power cable into a properly wired receptacle before connecting the instrument to other equipment with probes or BNC cables.

Since the outer metal shell of the CH2 SIG OUT connector on the right side panel is connected to the chassis through a 5 Ω resistor, it should not be floated and should be regarded as directly grounded point for actual applications.

The metal terminal on the side panel is a measuring ground terminal directly connected to the chassis. It may be used to connect the outer braids of shielded cable or other lead wires to be grounded.

Note: Two BNC receptacles on the front panel are installed with a slight tilt for operational convenience when probes and cables are connected with the receptacles.

3.6 BATTERY REPLACEMENT

The memory backup battery of the VP-5610P is a non-rechargable lithium battery.

- CAUTION -

1. The service lifer of battery is approximately three years in a normal operating environment. The battery life may decrease to one year if the

instrument is exposed to high temperature around the upper operating temperature limit for a long period of time.

If the front panel setup is not retained when the power is turned on, the battery should be replaced. Contact your nearest Matsushita Service Station for assistance in replacing the battery.

2. Do not shortcircuit the battery.
3. Do not dispose the battery in fire.

3.7 INITIALIZATION FROM FAULTY SETTING

Major parts of the internal circuits are controlled indirectly by the front panel controls and key switches through the microprocessor operation. The internal control circuit may sometimes cause malfunction because of external noise from the power supply line due to repeated power on/off with short intervals. This may result in:

(1) Contradictory setting (for example, more than one trigger sources are selected.)

(2) Keys become not operative.

To recover from such malfunction:

(1) Turn power off.

(2) Turn power on simultaneously pressing the GND keys of both CH1 and CH2 AC-GND-DC selectors. Hold the GND keys for at least 1 second.

(3) Release the GND keys and select desired settings.

Note: If faulty condition continues, connect the VP-5610P to a different power line. If this does not correct the problem, contact Matushita Service Station.

4. OPERATION

4.1 GENERAL

Section 4 gives basic operation procedures of the VP-5610P with front, side and rear panels and controls on the bottom. The front panel is divided into three portions by their functions for descriptive convenience as illustrated in Fig. 4-1.

4.2 PREPARATIONS

4.2.1 Intensity

Unnecessarily high intensity of the display may cause the damaged CRT. Make sure the INTENSITY control is positioned for an adequate trace intensity, especially when the sweep speed is low or a spot trace is located at a fixed position of the screen for a long period of time.

4.2.2 Trace gradient

Strong magnetic field and/or earth magnetism may deviate the basic trace line from the horizontal graticule. If the trace displayed is not parallel to the horizontal graticule, rotate the TRACE ROTATION screwdriver adjustment on the right side panel adjusting the trace line with the central horizontal graticule.

4.2.3 Scale illumination

Illumination strength of horizontal and vertical graticule lines may be adjusted as needed using the SCALE ILLUM control on the right side panel. Illumination of graticule lines is required for photograph with scale lines.

Note: The AC power pack is required for scale illumination.

4.2.4 Intensity modulation (Z axis)

Intensity modulation is provided when a Z-axis signal is supplied from the Z AXIS INPUT connector on the right side panel. The Z-axis signal must be time-related with the waveform currently on the screen for a stable display. The minimum voltage required for visible intensity modulation depends on the setting of the INTENSITY control. At a normal intensity level, a 5-V peak-to-peak, positive signal will provide a visible modulation yielding a bright modulated portion on the trace.

4.2.5 Calibrator

The side panel CAL terminal provides the 0.3 V peak-to-peak, positive square-wave output with approximately 1-kHz frequency. The output signal is used for checking waveform deflection or for adjusting probe compensation. Output impedance is 100 Ω or less. When connecting a probe to the CAL terminal, be sure to connect the probe ground lead with the ground terminal.

4.3 CONTROLS AND CONNECTORS

Brief descriptions of functions and operations of key switches, controls, connectors, terminals, LEDs and encoder on the front, side and rear panels and on the bottom of the VP-5610P are given in this section.

The front panel is divided into three sections with figures provided to each functional component. Fig. 4-1 shows how the front panel is divided.

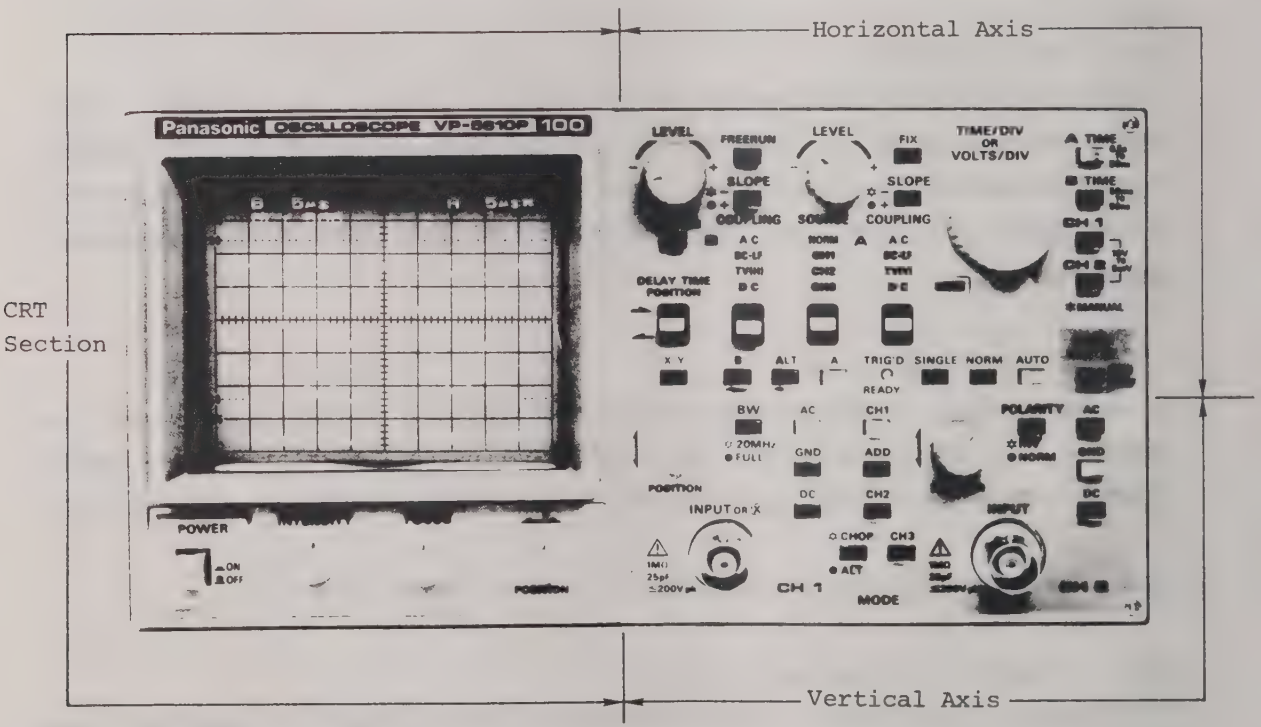

Fig. 4-1 Front panel

Fig. 4-2 shows the front view of the CRT section.

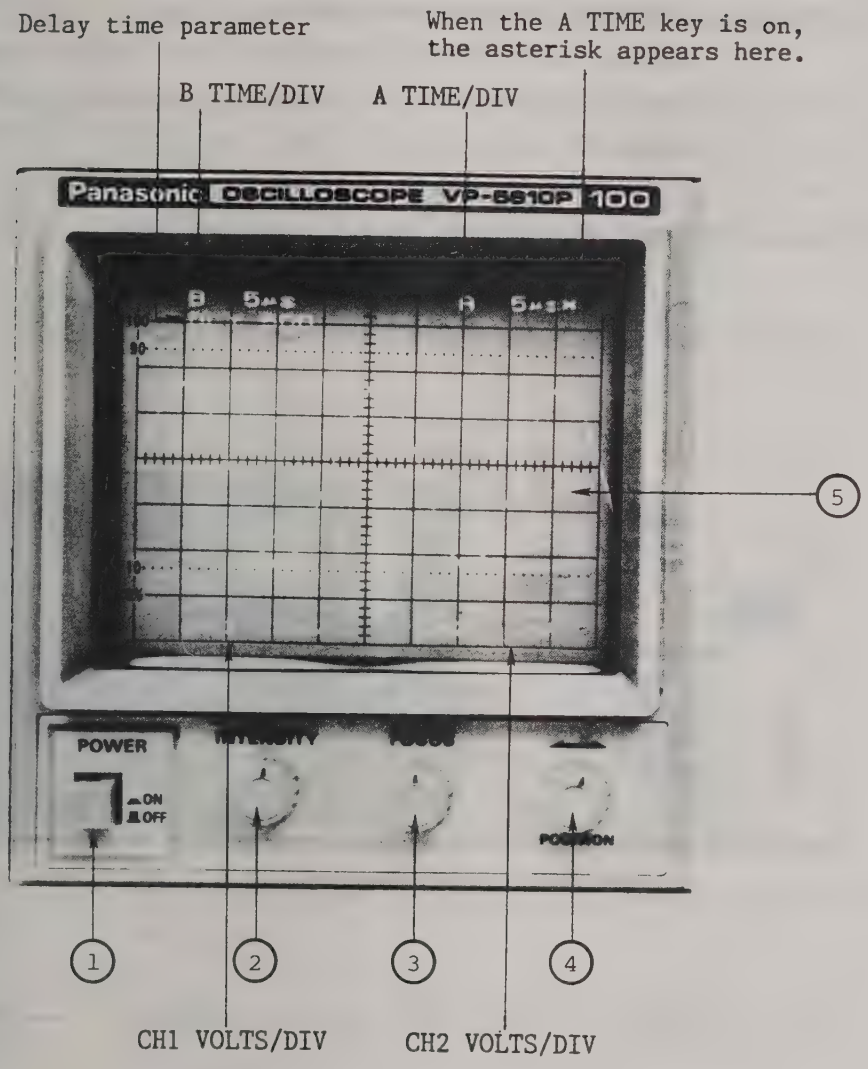

Fig. 4-2 CRT section

① 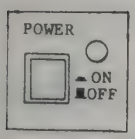

..... Press in the switch to turn power on. The adjacent LED lights during the power is on.

② INTENSITY ... The control adjusts the trace intensity displayed on the screen.

③ FOCUS ..... The control adjusts the display for the optimum definition.

④ ⟷ POSITION .. The control shifts the trace horizontally.

⑤ CRT screen ... Displays the selected traces, channels 1 and 2 vertical amplitude, A and B sweep times, and delay time position. Major parameters of current settings are digitally displayed.

Fig. 4-3 shows the front view of the Vertical Axis section.

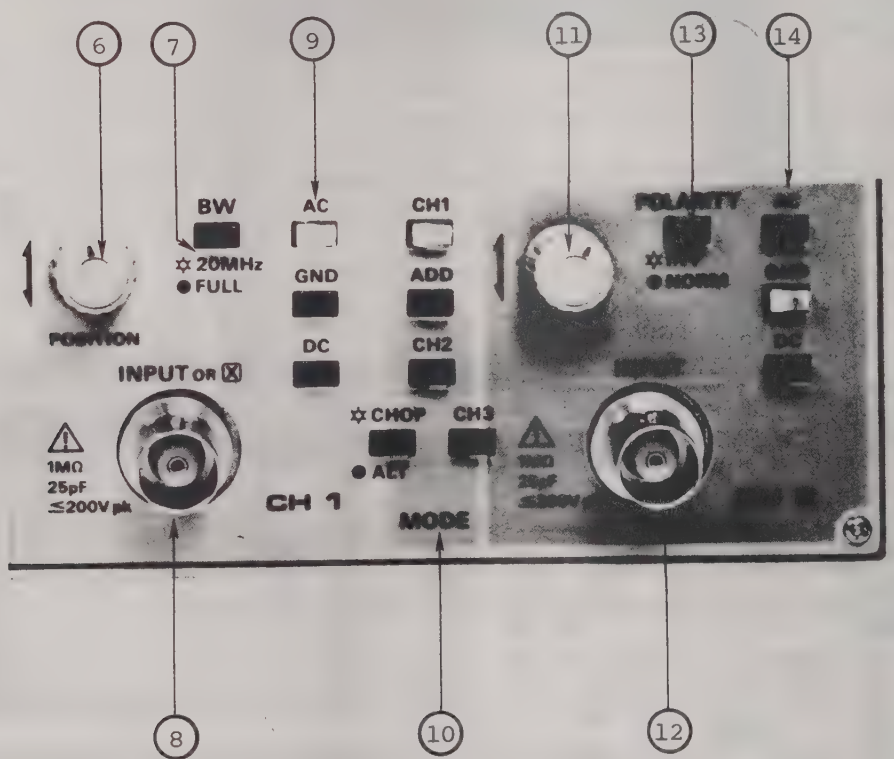

Fig. 4-3 Vertical axis section

⑥ ↕ POSITION ... The control shifts the CH1 trace vertically.

⑦

... Pressing the key switch lights the LED and limits the bandwidth to 20 MHz. When released 100-MHz bandwidth is selected.

⑧ INPUT or X ... The input connector for CH1 input signal or X-axis signal in the X-Y mode.

⑨ AC-GND-DC ... The three key switches select the coupling of input CH1 signal to the vertical deflection circuit.

AC ... Pressing the key switch selects the AC coupling (the LED lights). The input signal is capacitively coupled to the vertical amplifier and the DC component of the input signal is blocked. Note that the SAG of the square-wave becomes apparent when a square-wave of less than 1 kHz is AC coupled. The low frequency characteristic (-3 dB point) is approximately 4 Hz.

GND ... Pressing the key lights the LED indicating that the input circuit of amplifier is grounded.

DC ... Pressing the key lights the LED indicating that the input signal is directly coupled to the amplifier.

⑩ MODE selector ... The group of key switches is used to select the operation mode for the vertical deflection circuit. At least one channel must be selected.

CH1 ... Pressing the key lights the LED and displays CH1 waveform on the screen.

CH2 ... Pressing the key lights the LED and displays CH2 waveform on the screen.

CH3 ... Pressing the key lights the LED and displays CH3 waveform on the screen.

☼ CHOP
● ALT ... Pressing the key lights the LED indicating that the CHOP mode is selected. The multi-trace display switches between channels at a repetition rate of 500 kHz regardless of the sweep speed. Generally, the mode is used for the slow sweep speed.

Pressing the CHOP/ALT key again turns the LED off and selects the ALT mode, which alternately displays input signal traces at the end of each sweep. Generally, the mode is used for the high sweep speed.

ADD ... Pressing the key lights the LED indicating that the ADD mode is selected. This mode defaults to CHOP, but ALT may be selected. In the ADD mode, the algebraic sum or subtraction of CH1 and CH2 input signals is displayed. Pressing the ADD key again turns the LED off and the mode is cancelled.

⑪ POSITION ... The control shifts the CH2 trace vertically.

⑫ INPUT ..... The connector has the same function as ⑧, but for CH2. The Y-axis signal is input from the connector in the X-Y mode.

⑬ POLARITY ..... Pressing the key switch lights the LED, select the invert mode, and inverts the CH2 display. When the key is pressed again, the LED goes off and resets to the normal mode.

☼ INV
● NORM

⑭ AC-GND-DC ... The group of key switches has the same function as ⑨, but for CH2.

Fig. 4-4 shows the front view of the Horizontal Axis section.

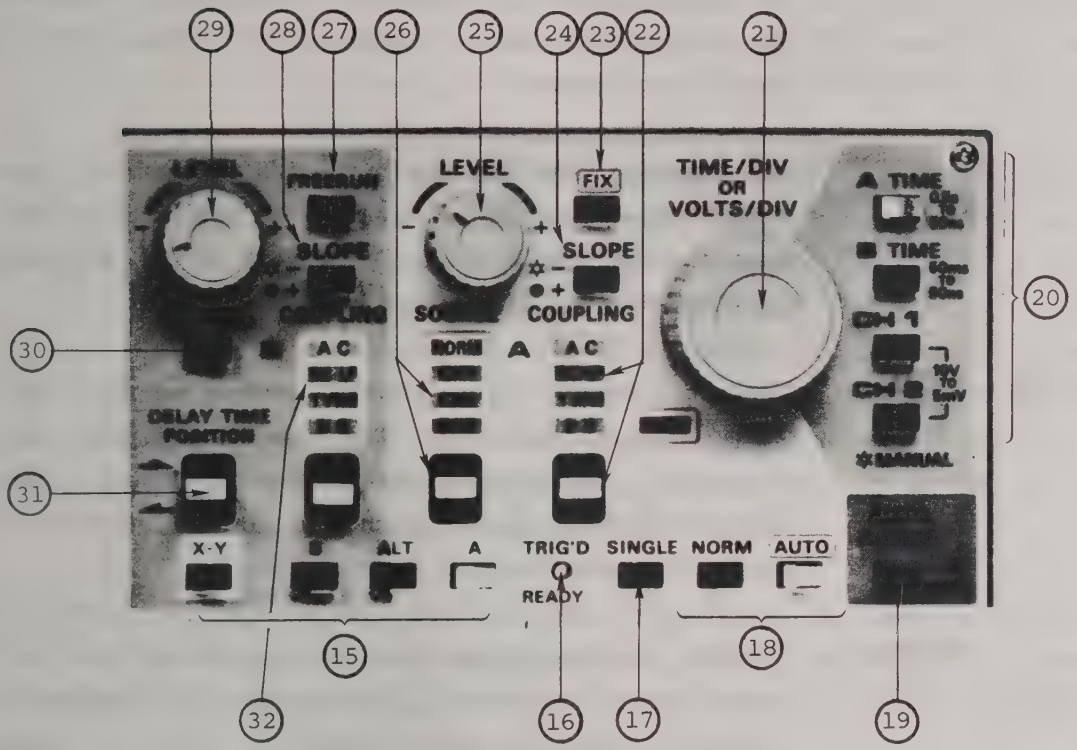

Fig. 4-4 Horizontal axis section

(15) Sweep mode ... The group of key switches selects or cancel the sweep mode.

A ... Pressing the key lights the LED indicating that the main A sweep mode is selected.

ALT ... Pressing the key lights the LED indicating that the alternate mode is selected. Main A sweep and delayed B sweep are alternately displayed on the screen.

B ... Pressing the key lights the LED indicating that the delayed B sweep mode is selected. The sweep time is determined by the B sweep range setting.

X-Y ... Pressing the key lights the LED indicating that the X-Y mode is selected. When any other key in the group is pressed, the X-Y mode is cancelled.

⑯ TRIG'D ... The green LED lights indicating a READY status (waiting for the trigger pulse) in the single sweep mode. In other mode than the single sweep, the lit LED indicates that the A sweep is triggered.

⑰ 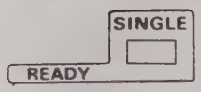

... Pressing the key lights the LED indicating that the single sweep mode is selected. The key is also used for resetting the single sweep. The setting is automatically canceled when the AUTO key ⑱ is pressed.

⑱

... Pressing the key lights the LED indicating that the AUTO sweep mode is selected. When the input signal has been triggered, a stationary waveform is displayed. When no triggering signal exists or the triggering level is off the scale, the sweep becomes freerun.

... Pressing the key lights the LED indicating that the NORM sweep mode is selected. The waveform is displayed only when the sweep has been triggered. When no triggering signal exists or the triggering level is off the scale, no trace appears on the screen.

⑲

... Pressing the key lights all of the AUTO, AC of the trigger SOURCE and FIX LEDs come on selecting the AUTO RANGE mode. When the mode is selected, proper VOLTS/DIV and TIME/DIV settings are automatically selected based on the amplitude and frequency of the input signal supplied to either CH1 or CH2 (CH1 has the priority).

When the AUTO RANGE mode is selected, all key LEDs of A TIME, B TIME, CH1 and CH2 of the MANUAL group go off. The B TIME is not set by pressing the AUTO RANGE key, but is automatically set as 1/10 of the A TIME.

Pressing the A TIME key causes the LED to come on and switches only the A TIME from auto ranging to the manual mode. B TIME, CH1 and CH2 may also be switched from auto ranging to the manual mode by pressing keys as needed.

When cancelling auto range, press the AUTO RANGE key again turning off the LED and resetting to the manual mode.

⑳ A TIME, B TIME, CH1 and CH2 ... Pressing the CH1 key lights the LED, displays the asterisk mark at the CH1 input field on the screen, and enables the VOLTS/DIV encoder ㉑ to change the CH1 range.

Pressing the CH2 key lights the LED, displays the asterisk mark at the CH2 input field on the screen, and enables the VOLTS/DIV encoder ㉑ to change the CH2 range.

Pressing the A TIME key lights the LED, shifts the asterisk to the A TIME input field, and enables the encoder ㉑ to change the setting for the A sweep.

The B TIME key has the same function as that of A TIME, but for the B TIME.

㉑ TIME/DIV or VOLTS/DIV ... The encoder increments or decrements the parameters in the CH1/CH2 TIME/DIV or VOLTS/DIV input field according to the key switch selection of MANUAL group 20 .

㉒ A TRIG COUPLING ... The switch selects the coupling for the A trigger signal. The lever (below the LED display of AC, DC-LF, TV (V), DC, and LINE) scrolls up or down the lit LED of the five LED group. Reselection of the coupling is performed simply by pressing up or down the lever.

[AC] ... Blocks the DC component of trigger signals by the capacitor and attenuates signals up to 30 Hz.

[DC-1F] ... Accepts DC signals to 50 kHz

[TV(V)] ... Separates the TV vertical synchronization signal from TV signals and supplies it to the trigger circuit.

[DC] ... Accepts all trigger signals and supplies them to the trigger circuit.

[LINE] ... Mains power line frequency is used as the triggering source.

(23) FIX ... The key selects the AUTO FIX mode or normal triggering using the trigger level set with the LEVEL control (25).

Turning the FIX key on lights the LED and sets to the AUTO FIX mode, in which triggering automatically occurs for signal with predetermined level or higher.

(24) SLOPE ... The key selects the A sweep trigger slope. When the SLOPE key is pressed and the LED lights, the negative-going slope is used for triggering. When the key is pressed again and the LED is off, triggering with the positive-going slope applies.

(25) LEVEL ... The LEVEL control sets the threshold level of the trigger signal where the sweep is triggered. The LEVEL control does not function during the FIX key (23) is on.

(26) TRIGGER SOURCE ... The lever (below the LED displays labeled NORM, CH1, CH2 and CH3) scrolls the lit LED indicating the signal source for the A and B sweep. Pressing the lever up or down reselects the trigger source.

NORM ... The signal displayed on the screen is used as the triggering signal.

CH1 ... The CH1 input signal is used as the triggering signal.

CH2 ... The CH2 input signal is used as the triggering signal.

CH3 ... The CH3 input signal is used as the triggering signal.

(27) FREERUN ... When the FREERUN key is pressed and the LED lights, the freerun sweep mode is selected. The B sweep starts after the delay time position set with lever (31) and sweeps at the delayed sweep rate set with encoder (21).

When the FREERUN key is pressed again turning off the LED, the triggering occurs with the trigger level set with control (29).

At this time, all triggering signals arrived before the delay time set with lever (31) are ignored. After the set delay time, the delayed sweep starts according to conditions set with controls (28), (29) and (32).

㉘

... The key switch selects the B sweep triggering slope. Operation is the same as control ㉔, but for the B sweep.

㉙ LEVEL ... The LEVEL control sets the B sweep trigger level. The function of the control is cancelled when the freerun mode is selected with key ㉗.

㉚

... When the x10 MAG key is pressed and the LED lights, the waveform currently displayed on the screen is magnified by ten times with a ten-fold increase in the sweep speed for both A and B sweeps. When the key is pressed again turning the LED off, the magnification mode is cancelled.

㉛ DELAY TIME POSITION ... The lever increments or decrements the delay time parameter in the DLY input field on the screen. When the lever is pushed up, the value decreases and the start point of B sweep moves to the right side of the screen. When it is pushed down the number increases and the start point moves to the left side of the screen. The start point is variable from the 0.3 div point to 10 div one. To calculate the delay time from A sweep start point to that of B sweep with the three-digit value appearing on the screen, divide the value by 100 and then multiply the resultant by the set A sweep range.

㉜ B TRIG COUPLING ... The key switch is for selecting the B sweep trigger coupling. The function is the same as that of lever ㉒ except the following:

When the lever ㉒ is set to LINE, the signal selected by the trigger signal source switch ㉖ is supplied to the B sweep trigger circuit.

When the lever ㉒ is set to TV (V), the TV horizontal synchronization signal is separated from TV signals, which is supplied to the trigger circuit.

Fig. 4-5 shows the front view of the Side Panel.

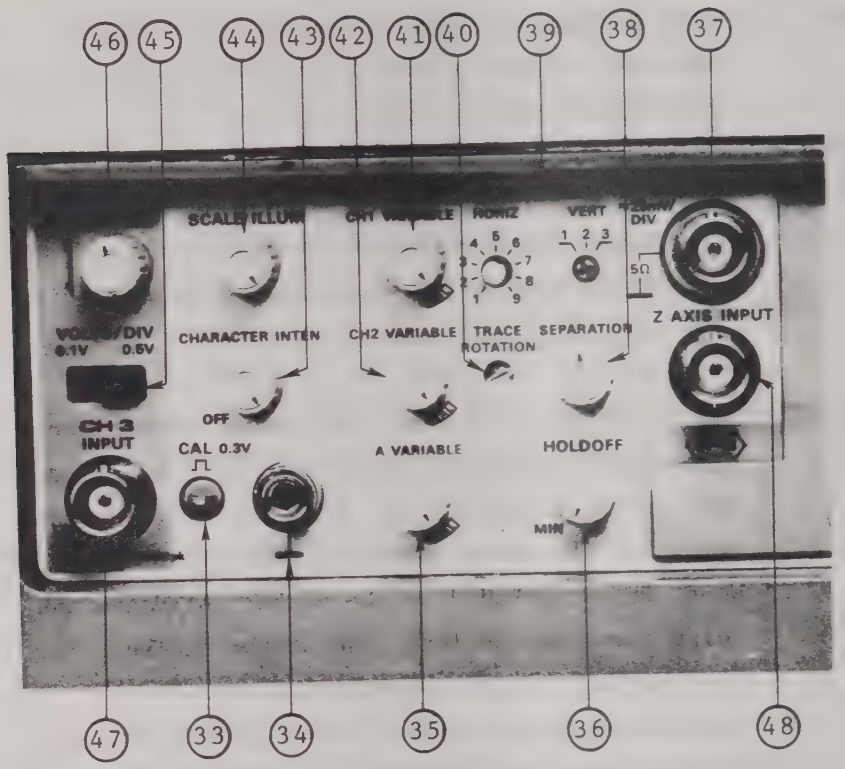

Fig. 4-5 Side panel

(33) CAL 0.3V ⎍ ... A calibrated 0.3 Vp-p square-wave of approximately 1 kHz is output from the terminal

(34) ⊥ ..... Earth ground terminal

(35) A VARIABLE ... The control continuously varies the A sweep range up to 2.5 times the set value. When the control is set to the CAL position, the sweep time is fixed at the calibrated value displayed on the screen. When the control is turned from the CAL position, a > mark appears at the parameter field of the screen.

㊱ HOLDOFF ... The HOLDOFF control is used when monitoring complicated waveforms not able to be stabilized only with front panel LEVEL controls ㉕ and ㉙ . When the control is turned clockwise, the holdoff time is prolonged and decreases the display intensity. For normal measurements, the HOLDOFF control is turned fully counterclockwise to its MIN position.

㊲ CH2 SIG OUT ... Output terminal for CH2 signal

㊳ SEPARATION .... Adjusts the vertical position of the B sweep trace in the ALT sweep mode. The control does not function in any other modes than ALT.

㊴ 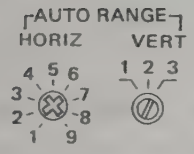

... The HORIZ and VERT screwdriver controls automatically presets the desirable amplitude and cycle so that an easy-to-observe trace is displayed when the AUTO RANGE ⑲ is turned on. The VERT control has 1, 2 and 3 positions for automatic volts/div settings to 4 div, 6 div and 8 div, respectively. The HORIZ control has nine positions for presetting waveform cycles to be displayed. (For more details, see Section 4.5, AUTO RANGE, of this Manual.)

㊵ TRACE ROTATION ... The screwdriver control is used to adjust the parallelism of the trace with graticule lines. (Semi-fixed)

㊶ CH1 VARIABLE ..... The control continuously reduces the CH1 deflection coefficient up to 1/2.5 of the current volts/div setting.

㊷ CH2 VARIABLE ..... This has the same function as that of control ㊶ , but for CH2.

㊸ CHARACTER INTEN ..... The control increases or decreases the intensity of digital display on the screen. Turning the control clockwise brightens the alphanumeric display. When it is turned fully counterclockwise, the alphanumeric display fades.

㊹ SCALE ILLUM ... The control is used to adjust the brightness of scale lines. Turning the control clockwise increases the brightness.

㊺ 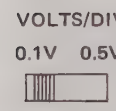

..... The switch selects the CH3 coupling with the 0.1 V or 0.5 V attenuator.

㊻ POSITION ..... The control adjusts the vertical position of CH3 trace.

㊼ CH3 INPUT ..... The input connector has the same function as that of connector ⑧, but for CH3. In the X-Y mode, the signal supplied from the connector determines the vertical deflection when CH3 of MODE selector ⑩ is turned on.

㊽ Z AXIS INPUT ..... The connector is for the CRT display intensity modulation signal.

Fig. 4-6 shows the appearance of the Rear Panel.

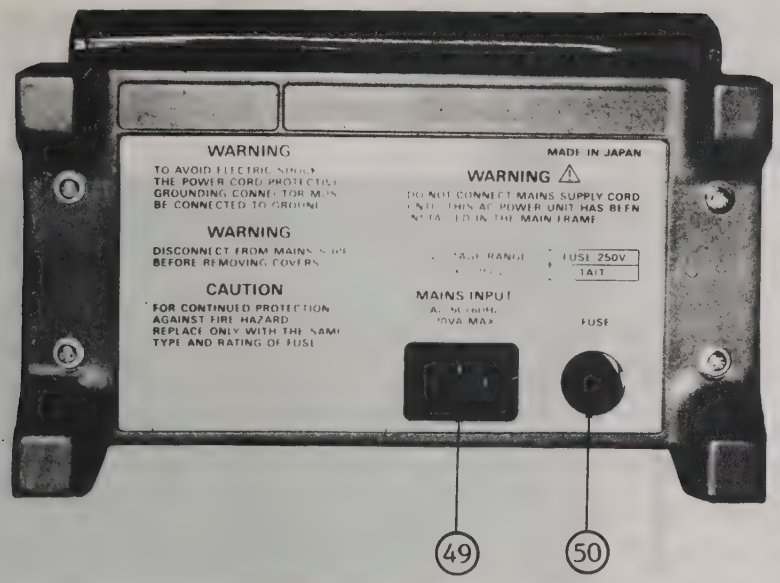

Fig. 4-6 Rear panel

49 ... Mains power inlet (plug receptacle)

50 FUSE ..... Holds an 1.6 A (T) fuse.

Fig. 4-7 shows the appearance of the Bottom of the VP-5610P.

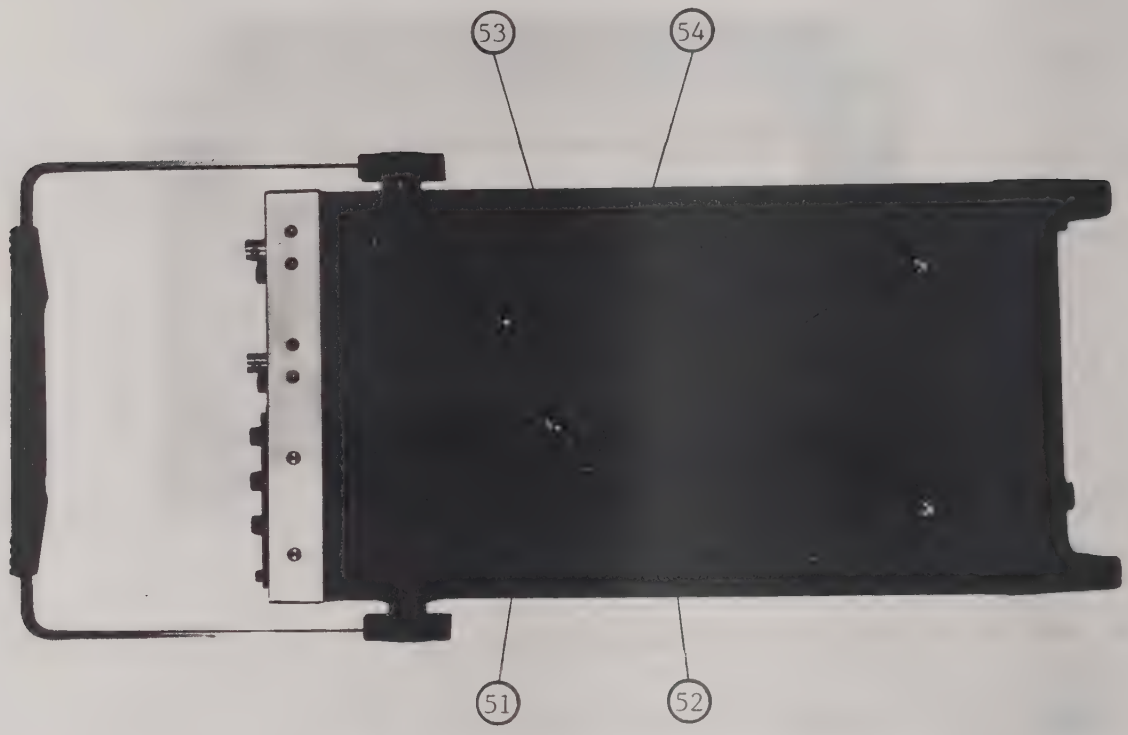

Fig. 4-6 Bottom

(51) CH1 DC BAL ... The control adjusts the DC balance of CH1 (or X axis) amplifier. Adjust the control so that the trace does not shift when the CH1 VOLTS/DIV is switched from 5 mV to 10 mV and then to 20 mV.

(52) CH1 GAIN ..... The control adjusts the CH1 gain. When adjusting the gain, set the CH1 volts/div to 5 mV/div.

(53) CH2 DC BAL .... The control adjusts the DC balance of CH2 (or Y axis) amplifier. The adjustment procedure is the same as that for the CH1 DC BAL.

(54) CH2 GAIN ..... The control adjusts the CH2 gain. When adjusting the gain, set the CH2 volts/div to 5 mV/div.

4.4 OPERATION OF VERTICAL AND HORIZONTAL SECTIONS

4.4.1 Mode switch

Mode switches CH1, CH2 and CH3 are used to set the operation mode selecting CH1, CH2 and/or CH3. CHOP and ALT switches are used to select the multi-trace modes.

: Turning the ALT key on causes the display to alternate between CH1 and CH2 at the end of each sweep. For a sweep time coefficient of 0.2 ms/div or less, the CHOP mode is recommended as an effective measurement method.

: The CHOP mode is usually used for multi-trace operation with a sweep time coefficient of 0.5 ms/div or less and for the single sweep. Inter-channel repetition rate is 500 kHz independent of the sweep speed. The trigger signal source lever cannot be set to NORM in the CHOP mode.

: The ADD mode is used to display the sum or subtraction of CH1 and CH2 signals. The following general cautions should be observed when operating in the ADD mode.

(a) Do not exceed the maximum input voltage.
(b) Do not apply voltage in excess of eight times the VOLTS/DIV setting.
(c) Use the vertical position controls to position both channel signals as close to the center of the screen as possible.

4.4.2 Input signal connections (Connectors ⑧ and ⑫)

The 10:1 probe is provided with VP-5610P for normal applications. The probe attenuates the input signal by 1/10, the input impedance becomes 10 MΩ and the low frequency characteristics is widen up to 0.4 Hz (-3 dB) in the AC coupling.

To obtain optimum high-frequency characteristics, a coaxial cable should be used to supply the signal to the input connector, with the input connection terminated with the impedance characteristic of the coaxial cable.

For measurement of low-frequency signals, ordinary leads may be used to connect signals. Since the use of ordinary leads involves the risk of external static noise, use of a shield wire is recommended.

Setting the probe switch to the REF position connects the input circuit to the ground. For normal measurements, set the probe switch to the x10 position.

4.4.3 Input coupling (AC-GND-DC switch group, see key switches ⑨ and ⑭)

The DC coupling is used for the most applications. The AC coupling blocks the DC component of input signal. The low-frequency cutoff point is at 4 Hz (-3 dB).

The GND position provides a ground reference at the oscilloscope input circuit by holding the input circuit at the ground potential. The signal supplied to the INPUT connector is internally disconnected, but not grounded. This is used for many purposes such as checking the base line status.

4.4.4 Deflection coefficient

The deflection coefficient is determined with the attenuation factor of the probe, the volts/div and the VARIABLE control settings. The calibrated deflection coefficient displayed on the VOLTS/DIV input field of the screen only applies when the VARIABLE control is set to the CAL position.

The VARIABLE control continuously changes the vertical deflection coefficient up to 2.5 times the set range, for example, the coefficient changes all the way up to 25 mV/div when the calibrated set value is 5 mV/div.

4.4.5 Bandwidth limiter (Key switch ⑧)

The BW (bandwidth limiter) switch reduces the vertical frequency bandwidth to 20 MHz blocking out undesirable high-frequency signals when measuring low-frequency signals. Pressing the key switch turns the LED on and sets to the 20 MHz bandwidth mode. Pressing the key again turns the LED off and returns to the full bandwidth mode.

4.4.6 Trigger and related operations

4.4.6.1 Trigger source switch group (SOURCE ㉖)

SOURCE ... The horizontal triggering signal is obtained from signals of the vertical deflection system. The trigger source switch selects from which channel the triggering signal is obtained as follows:

- [CH1] : The CH1 signal is used as the triggering signal.
- [CH2] : The CH2 signal is used as the triggering signal.
- [CH3] : The CH3 signal is used as the triggering signal.
- [NORM] : The signal currently displayed on the screen is used as the triggering signal.

Table below shows combinations of trigger source switches and vertical MODE switches.

V.MODE / T.MODE	CH1	CH2	CH3	ALT	CHOP	ADD
CH1	o	o	o	o	o	o
CH2	o	o	o	o	o	o
CH3	o	o	o	o	o	o
NORM	o	o	o	o (Note)		o

In the Table, T means "trigger SOURCE switches" and V represents "vertical axis MODE switches." The circles indicate applicable combinations. Note: The combination may be used, but it will not indicate the time relationship between channels.

4.4.6.2 Trigger signal coupling switch groups (COUPLING (22) and (32))

The trigger signal coupling switch groups consist of the following switches:

[AC] : When set to AC coupling, the DC component of the trigger signal is blocked out and signals of less than 30 Hz are attenuated. The AC coupling is used for most applications, however, in the event random pulse causes an unstable triggering, the DC coupling is used.

[DC-LF] : The DC-LF coupling accepts signals with DC components and frequencies less than 50 kHz. For complex waveform triggering, the coupling is useful for providing stable triggering with low-frequency signals.

[TV(V)] [TV(H)] : The video synchronous signal is separated and supplied to the trigger circuit for triggering of composite video signals. In this mode, complicated waveforms such as the TV composite signal may be effectively measured.

[DC] : The DC coupling is used to provide stable triggering with low-frequency signal which would be attenuated if the AC coupling were selected. The coupling is also used for triggering with low repetition rate signals.

[LINE] : The triggering signal is obtained from the mains power supply. The LINE triggering is useful when the input signal is time-related with the mains frequency.

4.4.6.3 SLOPE +, -

SLOPE The SLOPE key selects whether the triggered sweep starts with the positive- or negative-going edge of the trigger pulse. When the LED is off, the setting is positive (+) and the sweep starts with the positive-going edge. When the LED is on, the setting is negative (-) and the sweep starts with the negative-going edge.

4.4.6.4 LEVEL controls

The LEVEL controls set the voltage levels of trigger at which the sweep is triggered. When the LEVEL control is positioned in the positive (+) area, the sweep starts at a more positive point of the waveform. When the control is positioned in the negative (-) area, the sweep starts at a more negative point of the waveform.

4.4.6.5 HOLDOFF control

The HOLDOFF control is used to vary the holdoff time between sweeps and to enhance the triggering capability for measuring a part of the aperiodic signal, as shown in Fig. 4-7.

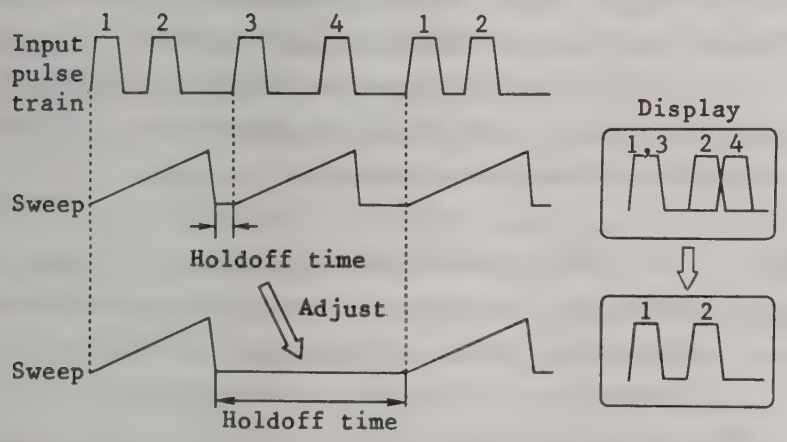

Fig. 4-7 Holdoff time function

Turning the HOLDOFF control clockwise increases the holdoff time causing a dim trace display. For normal waveform measurements, the control should be at the fully counterclockwise position labeled MIN.

4.4.7 Sweep and related operations

4.4.7.1 A sweep mode (key switches ⑰ and ⑱)

AUTO : The AUTO mode is useful for most applications. When no trigger signal exists, a freerun trace is displayed, and the trace position can be conveniently found. When a trigger signal exists and the LEVEL control has been properly set, a stable waveforms is displayed on the screen.

The TRIG'D LED lights during triggered A sweep display. When the repetition rate of trigger signal is 50 Hz or less, or when no trigger signal exists, the A sweep becomes a freerun sweep.

NORM : Operations in the NORM mode is the same as those in the AUTO mode when a trigger signal exists. However, when no trigger signal exists, the A sweep remains off and no trace is displayed.

The mode is used to clear the trace displayed when a trigger repetition rate of 50 Hz or less has caused unstable triggering or when no trigger signal exists.

: The SINGLE mode is used when only one sweep is required such as for a signal that is not repetitive or varies in amplitude, shape or frequency. The mode is useful for measuring a single-sweep, random signal.

When using the single sweep mode, first check that the trigger circuit will respond to the event to be displayed. Set the A SWEEP MODE switch to either AUTO or NORM and obtain a display in the normal manner. Then, press the SINGLE key. The READY LED will go on indicating that the sweep generator has been reset and is ready to produce a sweep. Upon arrival of the next signal, a single trace will be displayed. After that sweep, the READY LED goes off and the A sweep generator is locked off until it is reset by pressing the SINGLE key next time.

: Pressing the AUTO RANGE key turning the LED on causes both the AUTO and FIX LEDs to come on and sets to the auto ranging mode. In this mode, proper VOLTS/DIV and TIME/DIV

settings are automatically performed according to the level of CH1 or CH2 input signal (CH1 has the priority).

In the AUTO RANGE mode, the AUTO RANGE LED lights, while all LEDs of the MANUAL key group, A TIME, B TIME, CH1 and CH2, go off. The B TIME range is automatically set to 1/10 of the A TIME.

Pressing the A TIME key causes the LED to go on and only the A TIME is switched from the auto ranging to the manual mode. The B TIME, CH1 and CH2 may also be switched to the manual mode independently in the same manner.

When switching completely from the auto ranging mode to the manual mode, press the AUTO RANGE key turning the LED off.

4.4.7.2 Sweep time settings (MANUAL key group ⑳ and encoder ㉑)

The calibrated sweep ranges for the A and B sweep are displayed in the sweep time input fields on the screen.

To enter a value in the input field, press either A or B TIME key and turn the encoder ㉑ until the desired value appears.

The A VARIABLE control is for uncalibrated, continuously variable values between two adjacent ranges of the A sweep. Set the VARIABLE control to its CAL position (calibrated) for the normal measurement and the calibrated A sweep coefficient is displayed on the screen.

For time measurements, the left- and right-most divisions must be excluded. Reliable time measurements must be made in the central eight divisions shown in Fig. 4-8.

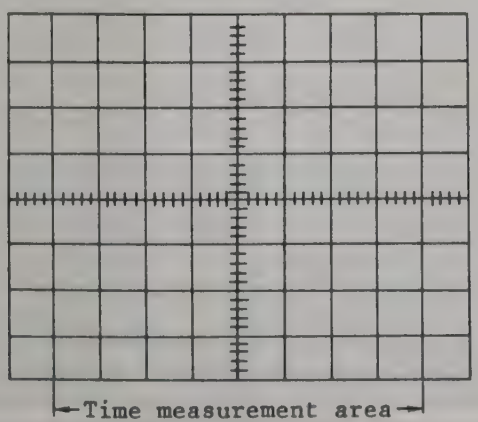

Fig. 4-8 Central eight graticule divisions for time measurements

4.4.7.3 Sweep magnification (x10 MAG key (30))

The sweep magnifier reduces the sweep time to 1/10 of the current set value, thus enlarging the trace by 10 times. Position waveform portion to be magnified within the screen central division and press the x10 MAG key.

The waveform segment shown in the central division is instantaneously magnified by a factor of ten filling the entire graticule area of the screen. When the key is pressed, the x10 MAG LED goes on and the displayed B time range becomes 1/10 of the unmagnified value.

The ◄► POSITION control adjusts the horizontal position of the magnified display in the same way as the unmagnified mode.

4.4.7.4 Delayed B sweep

The delayed B sweep operates when the ALT or B key switch of the sweep display mode key group (15) is turned on. When either of the two switches is on, the B sweep is displayed on the A sweep trace (ALT) or on the full graticule area (B). Press the B TIME key of the MANUAL key group (20) and rotate encoder (21) is to enter a time/div value for the B sweep.

An example of a waveform display using the ALT key is shown in Fig. 4-9. In this example, the delay time between the start of the A sweep and the intensified portion is determined by the A TIME setting. The width of intensified portion is determined by the B TIME setting.

When the B key switch of sweep display mode key group (15) is pressed, the display changes to show only the intensified portion. The B TIME value is displayed on the upper left of the screen.

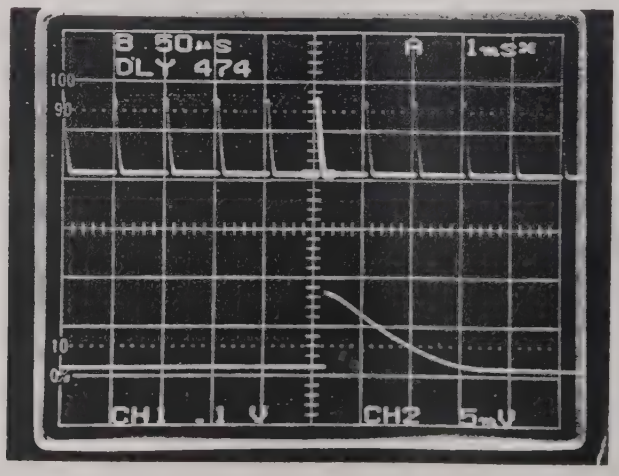

Fig. 4-9 Delayed B sweep display

4.4.7.5 B sweep triggering level (Keys ㉗ and ㉘, LEVEL ㉙)

When the FREERUN key of the B sweep section of the front panel is turned on, the LED comes on and displays similar to the ones shown in Fig. 4-10 (a) and (b) appear on the screen. In Fig. 4-10 (b), the B sweep starts after the delay time.

The B sweep begins immediately after the set delay time. The delay time is derived by multiplying the A sweep time (A TIME/DIV) by the delay time position and then multiplying the resultant by 0.01.

When the FREERUN key is turned off selecting the B sweep triggering mode, displays similar to the ones shown in Fig. 4-11 (a) and (b) appear on the screen. In Fig. 4-11, the first B sweep trigger signal following the delay time initiates the B sweep.

The trigger level setting procedure is the same for B triggering as that for A triggering. In the ALT mode, changing the delay time position value (Fig. 4-11 (a)) does not move the intensified portion continuously, but it appears to jump from one trigger level to the adjacent one. The special feature of the operation mode is that it minimizes the delay time jitter. To continuously change the B sweep start point, change the delay time position value in the FREERUN mode.

[B starts after delay time]

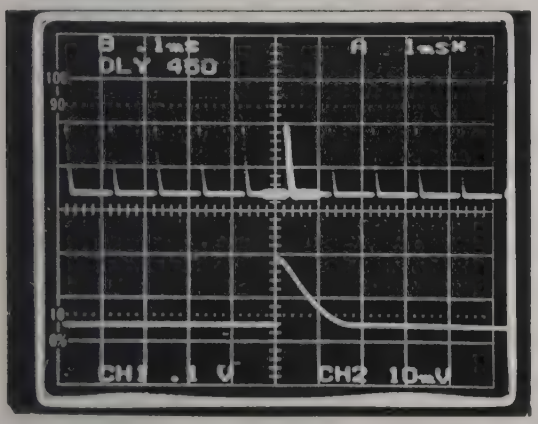

Fig. 4-10(a) Delayed sweep

Fig. 4-10(b) Delayed sweep

[B triggerable after delay time]

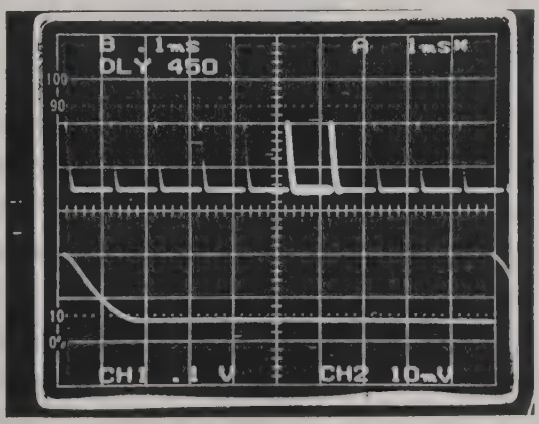

Fig. 4-11(a) Delayed sweep

Fig. 4-11(b) Delayed sweep

4.4.7.6 Alternate sweep (A/B alternation, Display mode key group ⑮)

When the ALT key of the sweep display mode 15 is turned on lighting the LED, the mode is set to the A/B alternation. The A/B alternation mode alternates the display between the A sweep (including an intensified portion to indicate the B sweep) and the B sweep (delayed sweep). As a result, two waveforms are displayed simultaneously. The unmagnified waveform is shown in Fig. 4-11 (a). The magnified waveform (B sweep) is shown in Fig. 4-11 (b).

The vertical position of B sweep may be adjusted with the SEPARATION control on the side panel.

4.4.7.7 TV(V), TV(H) (COUPLING key group ㉒ ㉜, FIX key ㉓)

When measuring video signals, set the trigger signal source of the A and B sweep sections on the front panel to TV(V) and TV(H), respectively.

The only stable triggerable video signal is the negative polarity sync signal with a sync amplitude as described in Section 2, Specifications (image composite signal must be the positive polarity).

Since the A sweep function includes the triggering function for vertical sync signals, the A sweep is used for the field-related measurement. The AUTO (automatic sweep) mode may be used for this purpose as well as the FIX (automatic triggering) mode.

When 2 ms is entered as the factor in the TIME/DIV A TIME input field, two frame traces appear on the screen, which may can be observed more in details by selecting a faster A sweep rate with the A VARIABLE control. However, selecting one of the two frames is not possible.

The B sweep (delayed sweep) triggered with the horizontal sync signal is used for the line-related measurement. Enter 10 µs in the TIME/DIV B TIME input field, select the ALT mode, and position the intensified portion so that the waveform portion to be observed is included. Pressing the B key of the display mode key group 15 under the condition causes a display of that specific line. The video composite signal may be observed in greater details by setting a faster B sweep rate.

Proper A TIME factor selection and HOLDOFF control setting avoid the duplicated waveform display caused by interlaced scanning. "B triggerable after delay time" shown in Fig. 4-11 (a) and (b) provides a stable and jitter-less display. However, the measurement is limited to the signal portion near the front edge of horizontal sync pulse.

4.4.7.8 X-Y operation (Display mode key group ⑮)

Press the X-Y key of display mode key group and select either CH2 or CH3 as the vertical axis. The signal supplied to the CH1 input provides the X-axis deflection. The trace position may be adjusted with the horizontal and vertical POSITION controls.

The Y-axis deflection is derived from the signal supplied to the CH2 INPUT connector and the VP-5610P operates as an X-Y oscilloscope.

X- and Y-axis sensitivities are calibrated to the set volts/div values of CH1, CH2 and CH3.

For a dual-trace X-Y display, turn both CH2 and CH3 of the vertical MODE on. (See Table 4-1.)

When the CH2 key is pressed in the second time, CH2 is cancelled and the VP-5610P operates as an X-Y oscilloscope with CH1 as the x axis and CH3 as the Y axis.

Table 4-1 CH1, CH2, CH3 combinations in X-Y operation

Vertical mode				
	CH1	X axis	X axis	X axis
	CH2	o		o
	CH3		o	o
	ADD	NG	NG	NG
		X ···CH1 Y ···CH2 1-trace X-Y	X ···CH1 Y ···CH3 1-trace X-Y	X ···CH1 Y ···CH2 CH3 2-trace X-Y CHOP operation

4.5 AUTO RANGE

4.5.1 GENERAL

Newly developed auto ranging function built-in the VP-5610P allows adequate waveform display with very simple operation. Since settings of the calibrated vertical axis volts/div and the horizontal axis sweep time are automatic, all that are required for a waveform display is just to supply the measuring signal to the input connector and press the AUTO RANGE key. Required settings suitable for unknown signals are instantaneously done by the instrument as long as input signals are within the specified triggerable frequency range. Desired number of trace cycles and the vertical deflection to be displayed may be preset with AUTO RANGE HORIZONTAL and VERTICAL controls on the side panel.

When the AUTO RANGE key is pressed, the auto ranging function selects appropriate volts/div and A sweep time range according to the applied input signal level from:

Volts/div: 11 ranges between 5 mV/div and 10 V/div

A sweep time: 22 ranges between 50 ns/div and 0.5 s/div

Settings other than these two are manual. Selecting a channel for vertical axis, magnifying the A sweep, applying the B sweep, or adjusting the vertical or horizontal position should be done in advance or corrected after pressing the AUTO RANGE key.

4.5.2 THEORY OF OPERATION

When the manual mode is switched to the AUTO RANGE mode by pressing the AUTO RANGE key, the vertical axis channel currently selected is AC coupled with the maximum sensitivity of 5 mV/div and waits for an input signal. Upon arrival of an input signal, an appropriate volts/div value for the preset trace amplitude is automatically searched and set.

If the time axis is triggerable, an appropriate A sweep time range will be selected to display the specified number of waveform cycles on the screen. If more than one channel has been selected, the auto ranging function will selects an appropriate sensitivity for each channel and will select a sweep time range based on the channel with the lowest frequency signal.

Since stable triggering is essential for the proper auto ranging operation, the operational modes are enforced to go AUTO for the A sweep and FIX for triggering upon switching to the auto ranging mode. The same channel currently set as the vertical axis is automatically selected as the trigger signal source. All other settings are maintained as they have been set.

The specified triggering frequency range for the AUTO RANGE function is from 200 Hz through 10 MHz. The auto ranging function is applicable to any input signals within the specified frequency range and that has sufficient amplitude to be stably triggered at the VP-5610P peak sensitivity, that is, 5 mV/div.

The B sweep time range (19 ranges covering between 50 ns/div and 50 ms/div) is automatically determined from the A sweep time. (Described later in detail.)

The sensitivity and the sweep time settings thus selected with the auto ranging function are digitally displayed on the screen. One of the four range settings that the auto ranging function automatically set may be switched to the manual mode, which is called the semi-auto ranging.

4.5.3 AUTO RANGE OPERATION

4.5.3.1 Preparation

It is recommended to set basic key switches and controls as needed before pressing the AUTO RANGE key.

- Set the signal coupling to AC. Adjust vertical and horizontal position of the trace to approximately the center of the screen.
- Select the type of trigger coupling and the desired operation mode of vertical axis.
- Turn off the x10 MAG key.
- Set all VARIABLE controls to CAL positions and HOLDOFF control to MIN.
- Specify the A sweep mode and temporarily turn off the B sweep.

4.5.3.2 Range transition point--Setting the desired deflection level and number of cycles to be displayed.

The automatic transition point of sensitivity range is selected with this operation, specifying the vertical trace amplitude limit that the next sensitivity range should be applied. The automatic transition point of A and B time ranges are also selected, specifying the minimum number of cycles displayed and at what point the next time range should be applied. Use a screw-driver to set the AUTO RANGE VERT and HORIZ controls, the two semi-fixed AUTO RANGE controls specifying the above tow automatic transition points.

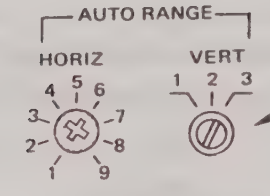

VERTICAL LEVEL

The VERT control specifies the approximate reference amplitude level at 1 to 3 as follows:

1 ..... 4 div
2 ..... 6 div
3 ..... 8 div

HORIZONTAL LEVEL

The number of HORIZ control, 1 to 9, indicates the minimum number of cycles to be display. Since these number serves only as the reference based on a sinewave with the range coarsely graduated with 1-2-5 sequence, the exact number of cycles actually displayed will vary.

Since these values serve only as the reference based on the sinewave (with the range selectable in steps of 1-2-5), the exact number of divisions displayed will vary depend on the input signal waveform.

4.5.3.3 Starting AUTO RANGE operation

Pressing the AUTO RANGE key on the front panel to ON turning the LED on switches from the manual operation to the auto ranging mode. All four key LEDs, A TIME, B TIME, CH1, and CH2 keys, will go off and the manual range key switches will not function. At the same time, the AUTO key LED for the A sweep mode and the FIX key LED for the FIX triggering go on.

One of four LEDs of trigger source goes on showing the selected trigger signal source. This trigger source selection is automatically made based on the current vertical mode setting.

Simultaneously, The AC input coupling for the channel currently in use will be selected and the corresponding AC key LED lights.

If the input signal to be measured is within the specified triggerable range, a stable trace will appear on the screen--simple operation of pressing the AUTO RANGE key for easy-to-observe trace display.

4.5.3.4 Auto ranging and trigger source in multi-trace display

When auto ranging is started in a multi-trace mode, the trigger signal source will automatically be selected as shown in the Table below:

Vertical Channels	CH1 CH2	CH1 CH3	CH2 CH3	CH1,CH2 CH3
Trigger source	CH1	CH1	CH2	CH1

The number of trace cycles to be displayed depends on the signal of the trigger signal source. The source may be changed manually even after auto ranging is started, provided that a signal has been supplied to the selected channel and triggering with that signal is possible.

The CH3 range setting can only be operated manually, which is used for a multi-trace display or as an external trigger signal.

4.5.3.5 Changing settings and displaying the B sweep

Each setting described above may be changed after the start of auto ranging. However, the settings for the vertical and horizontal rang transition points discussed in Section 4.5.3.2 cannot be changed during the AUTO RANGE operation. If changes of these settings are required, it is required to discontinue the vertical axis input and set the sweep to freerun during resetting operation. After resetting, the input signal is supplied again for triggering. For to discontinue the vertical axis input, perform one of the following three:

- Disconnect the probe,
- Select GND coupling on the front panel, or
- Set the probe switch to REF.

Pressing the AUTO RANGE key twice will also cause re-triggering, but the settings will return to the initial ones of the auto ranging mode as described in Section 4.5.3.3.

The B sweep and x10 magnification may also be operated. The number of cycles of trace displayed is reduced to 1/10 of the unmagnified setting.

When the B sweep is selected after auto ranging has been started, the B sweep time is automatically set to one-tenth of the A sweep time (the B sweep rate becomes ten times faster). The fastest B sweep rate applicable in auto ranging is 50 ns/div. For manually changing the B sweep time setting, press the B TIME key of the four MANUAL keys turning the LED on. Operate the manual range encoder to enter a desired B sweep time.

4.5.3.6 Semi-auto ranging

The manual setting of the B sweep time described in the last paragraph of the preceding Section is an application example of the semi-auto ranging. The other three ranges, CH1/CH2 sensitivities and the A sweep time range, may also be manually operated during auto ranging operation in the same manner.

To switch to the semi-manual ranging maintain the AUTO RANGE key on, press one of the four MANUAL keys. Note that semi-auto ranging may be selected one at a time. The selected range may be changed with the manual encoder labelled TIME/DIV or VOLTS/DIV.

4.5.3.7 Cancelling the auto ranging mode

To switch the auto ranging to the manual mode, press the AUTO RANGE key turning the LED off. All switch and control settings will be maintained as they are, but the four MANUAL keys. The A TIME key LED lights indicating the status that the A TIME range factor currently displayed or the A TIME input field may be manually changed with the encoder.

4.5.3.8 Notes

- The X-Y operation is not compatible with the AUTO RANGE function.

- NORM and SINGLE sweep modes are not selectable in auto ranging.

4.6 VP-5610P GP-IB INTERFACE VQ-051F (OPTION)

4.6.1 General

The VQ-051F is the GP-IB interface designed for exclusive use of the VP-5610P. Installing the VQ-051F allows the VP-5610P to act as the basic listener* and may be remote controlled via the GP-IB bus. The personal computer is used as the controller and the GPIB message appears on the upper right screen during the remote control operation.

The optional unit is convenient when using the VP-5610P as the programmable oscilloscope utilizing the capability of 100 MHz bandwidth.

*: According to the definition of report S5310 for the measuring instrument interface.

Features

- Operate the VP-5610P as the basic listener.
- Capable to remotely control the major VP5610P functions.
- Switching remote and manual control is simple only requiring the REMOTE/LOCAL switch operation.
- GPIB message appears on the screen indicating the remote control mode.
- Capable of displaying the error message.

4.6.2 Part composition

The GP-IB interface VQ-051F consists of the following components:

GP-IB board

MOS semiconductors are used on the printed circuit board and general handling cautions required for MOS products are required.

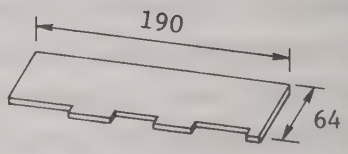

Connector cable (1)

Two GP-IB connector securing screws are provided with the connector cable.

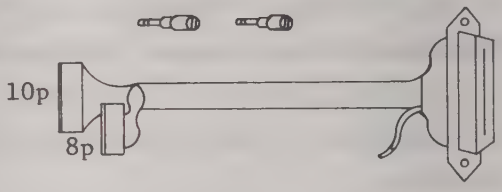

Connector cable (2)

Exclusive connector cable for BP-IB and the VP-5610P.

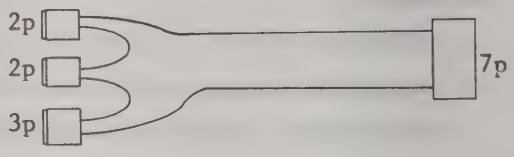

Slide switch

There is no need to distinguish front and rear of the switch. Make sure to firmly solder all pins, otherwise pin contacts may not withstand long service.

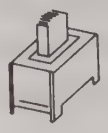

Exclusive ROM

For VP-5610P with ROM 05925 or 05932, the replacement of ROM is not required.

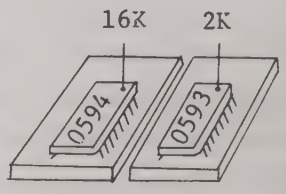

Insulation sheet

Be careful on the direction of the insulation sheet when installing it. The wider edge (64 mm) faces the front panel and the other, the fan controller side.

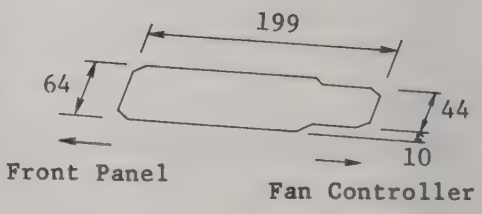

4.6.3 Remote controllable functions

Table 4-2 shows the remote controllable functions of the vertical section. Table 4-3 shows horizontal functions that may be remote controlled.

Table 4-2 Vertical functions for remote control

Channel	Function	Specification
CH1	Input coupling	AC, DC and GND
	Input sensitivity	5 mV/div to 10 V/div, 11 ranges in 1-2-5 steps
CH2	Input coupling	AC, DC and GND
	Input sensitivity	5 mV/div to 10 V/div, 11 ranges in 1-2-5 steps
	Polarity inversion	POLARITY on or off
Common to CH1/CH2	Bandwidth limitation	BW on or off
	Vertical mode (V MODE)	CH1, CH2, CH3 and ADD (CH1 and CH2), CHOP or ALT for multi-trace display
	AUTO RANGE	Not controllable

Table 4-3 Horizontal functions for remote control

A/B sweep	Function	Specification
A sweep	Sweep mode	AUTO and NORM
	A sweep time	0.5 s/div to 50 ns/div
	A trigger polarity	SLOPE + or -
	A trigger coupling	AC, DC-LF, TV(V) and DC
	A trigger source	NORM, CH1, CH2 and CH3
	FIX triggering	FIX on or off
B sweep	B sweep time	50 ms/div to 50 ns/div
	B trigger polarity	SLOPE + or -
	B trigger coupling	AC, DC-LF, TV(V) and DC
	B trigger	FREERUN on or off
	Delay sweep position	030 to 999
Common to A and B sweep	Sweep mode	A, ALT, B and X-Y
	Sweep magnification	x10 MAG on or off
	AUTO RANGE	Not controllable

Character display may also be remote controlled as shown in Fig. 4-35 and Table 4-4.

Character display coordinate	Remarks
1. 3B to 35	30 to 35 are commonly used for the
2. C0 to D5	GPIB display and error message.

VP-5610P display on the screen

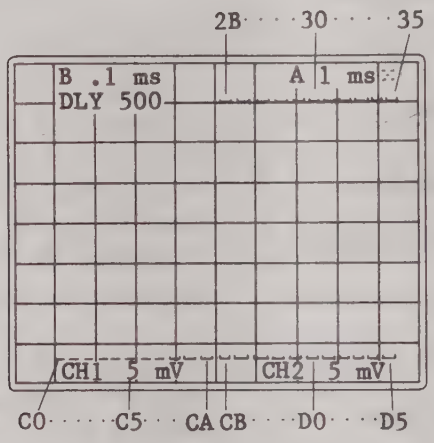

Fig. 4-35 Remote controlled character display

Table 4-4 Characters displayed with remote control via GP-IB interface

b_7			0	0	0	0	1	1	1	1
b_6			0	0	1	1	0	0	1	1
b_5			0	1	0	1	0	1	0	1
b_4	b_3	b_2	b_1	COLUMN / ROW	0	1	2	3	4	5	6	7
0	0	0	0	0	NUL	DLE	SP	0	@	P	`	p
0	0	0	1	1	SOH	DC1	!	1	A	Q	a	q
0	0	1	0	2	STX	DC2	"	2	B	R	b	r
0	0	1	1	3	ETX	CD3	#	3	C	S	c	s
0	1	0	0	4	EOT	CD4	$	4	D	T	d	t
0	1	0	1	5	ENQ	NAK	%	5	E	U	e	u
0	1	1	0	6	ACK	SYN	&	6	F	V	f	v
0	1	1	1	7	BEL	ETB	'	7	G	W	g	w
1	0	0	0	8	BS	CAN	(	8	H	X	h	x
1	0	0	1	9	HT	EM	)	9	I	Y	i	y
1	0	1	0	10	LF	SUB	*	:	J	Z	j	z
1	0	1	1	11	VT	ESC	+	;	K	[	k	{
1	1	0	0	12	FF	FS	,	<	L	\	l	|
1	1	0	1	13	CR	GS	-	=	M	]	m	}
1	1	1	0	14	SO	RS	.	>	N	^	n	~
1	1	1	1	15	SI	US	/	?	O	_	o	DEL

4.6.4 Functions independent from remote control

The following and controls may be manually operated even when the VP5610P is contrlled remotely via the GP-IB interface.

Vertical

CH1: Vertical trace position with the VARIABLE control. When the control is not at the CAL position, a ">" appears on the screen.

CH2: Vertical trace position with the VARIABLE control. When the control is not at the CAL position, a ">" appears on the screen.

CH3: Vertical trace POSITION control

Common for CH1/CH2/CH3: When the sweep mode is ALT or B, the SEPARATION control may be operated.

Horizontal

The A VARIABLE and HOLDOFF controls may be operated regardless of the GP-IB setting. When the A VARIABLE is not at the CAL position, a ">" appears on the screen.

CRT portion

The INTENSITY, FOCUS, horizontal POSITION, SCALE ILLUM and CHARACTER INTEN controls are all independent from the GP-IB setting.

4.6.5 GP-IB address setting

The GP-IB unit is set to address setting "3" when the product is shipped from the factory. Address setting "3" is as shown in Fig. 4-36.

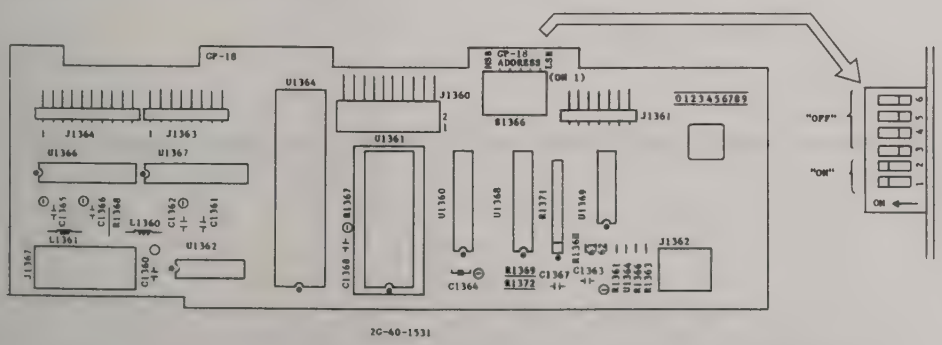

Fig. 4-36 Dip switch settings for address setting "3"

4.6.6 VQ-051F installation

Use the VP-5610P with the connector for GP-IB interface when installing the GP-IB board. Perform the following checks before beginning the installation.

1. Set the LOCAL REMOTE switch at the LOCAL position.

2. Turn on the power supply of VP-5610P and check that its operations are normal.

3. Set the LOCAL REMOTE switch at the REMOTE position. Check that the "GPIB" message appears on the upper right screen. Also check that all key switches do not functions, but controls included in Table 4-5 work.

Table 4-5 Controls that function in the remote mode

Vertical	Horizontal	CRT controls
CH1 POSITION	A VARIABLE	INTENSITY
CH1 VARIABLE	H POSITION	FOCUS
CH2 POSITION	HOLD OFF	SCALLE ILLUM
CH2 VARIABLE		CHARACTER INTENSITY
CH3 POSITION	A trigger LEVEL	
SEPARATION	B trigger LEVEL	

4. If the check results are satisfactory, turn the power supply off.

4.6.6.1 GP-IB board installation

See Fig. 4-37 for connections of GP-IB connectors and position of the GPIB board. Follow the procedures described below.

1. The GP-IB board is installed on the board holder next to the side panel. Make sure that the board surface with components faces the CPU board. Plug the connector cable (2) with the CPU board and then plug in the other connector with J1361 on the GP-IB board. For overall GP-IB connections, see Fig. 4-37.

2. Plug in the 10-pin connector to J1364 and 8-pin connector, J1363. Insert the excessive connector cable (1) between the printed circuit boards.

3. Pass the white cable connected with the CPU board above the GP-IB board.

4. Adjust the length of the white cable connected with the side panel in the same way.

5. Insert the insulation sheet provided between the GP-IB board and side panel.

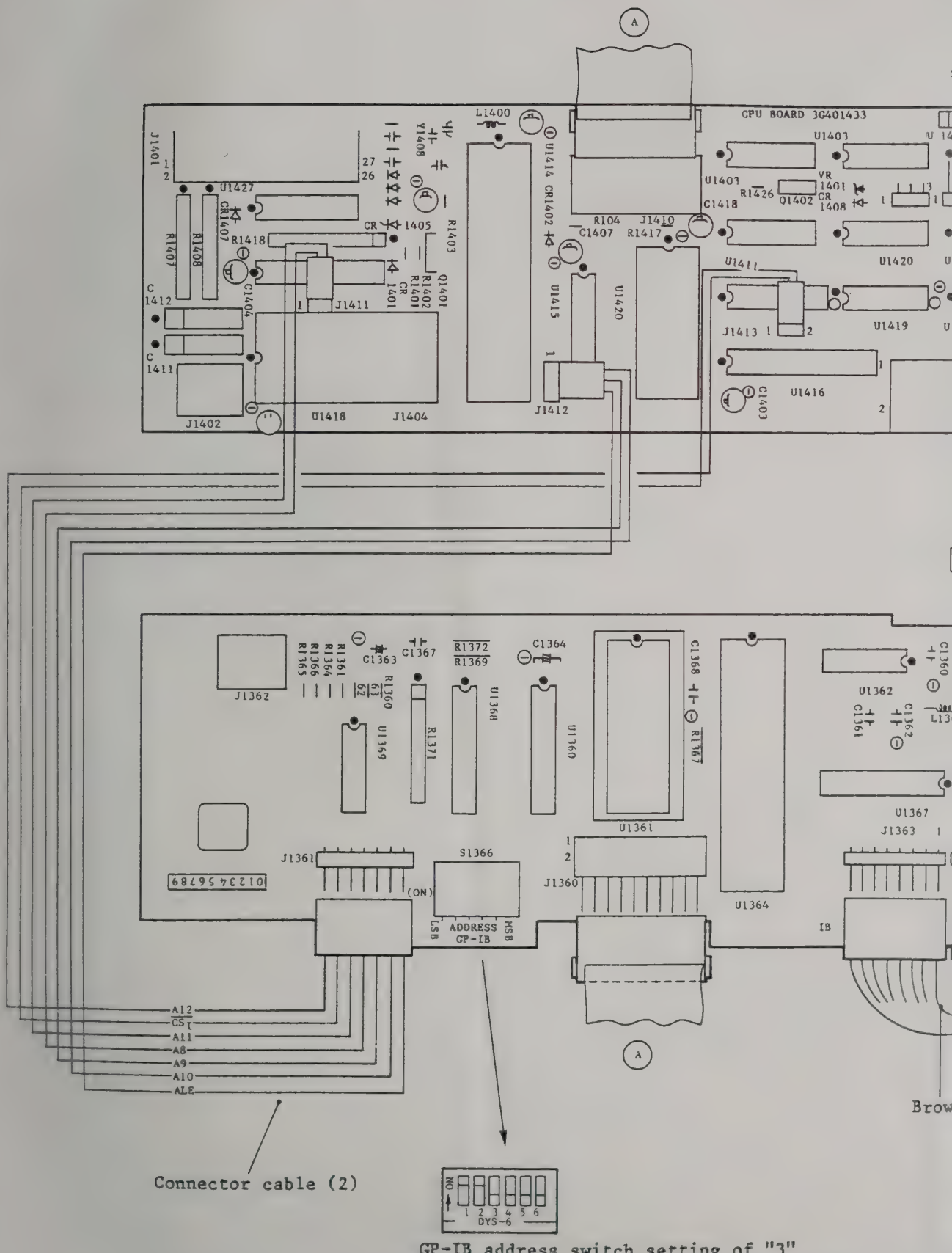

GP-IB address switch setting of "3"
(Dip switches 1 and 2 are on and the others are off

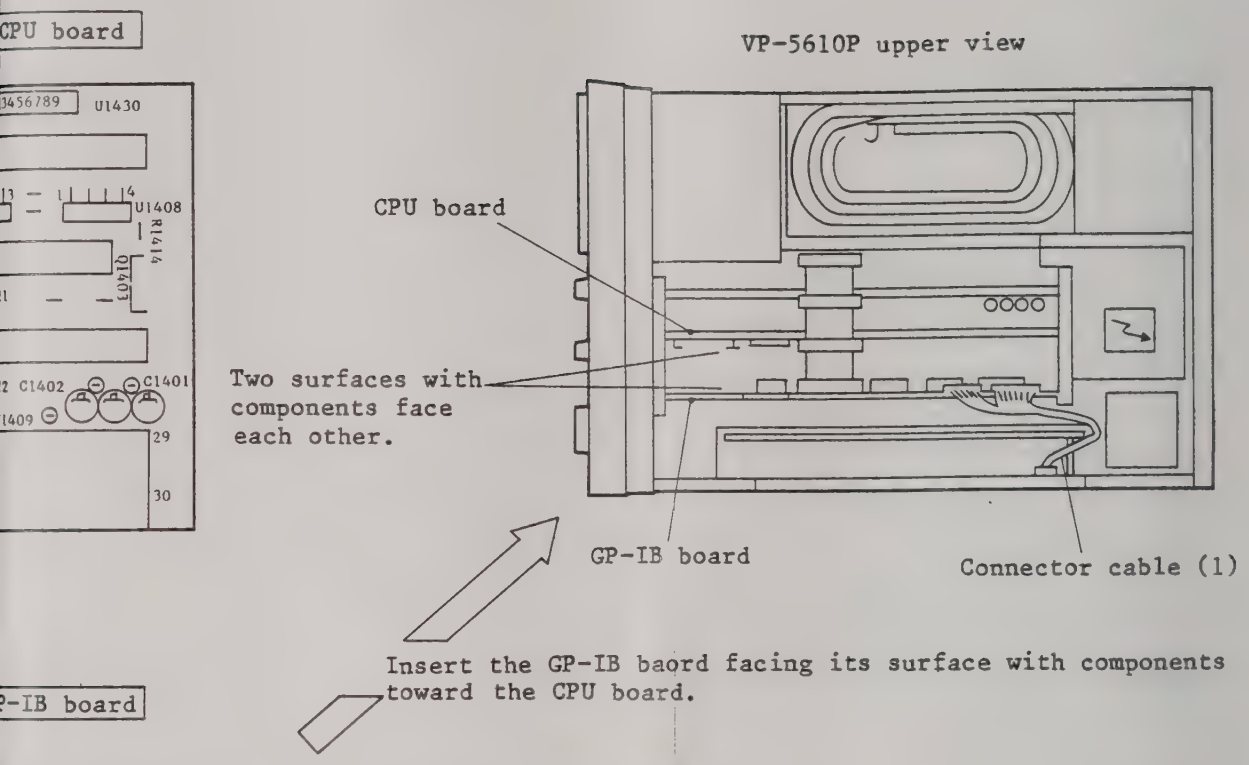

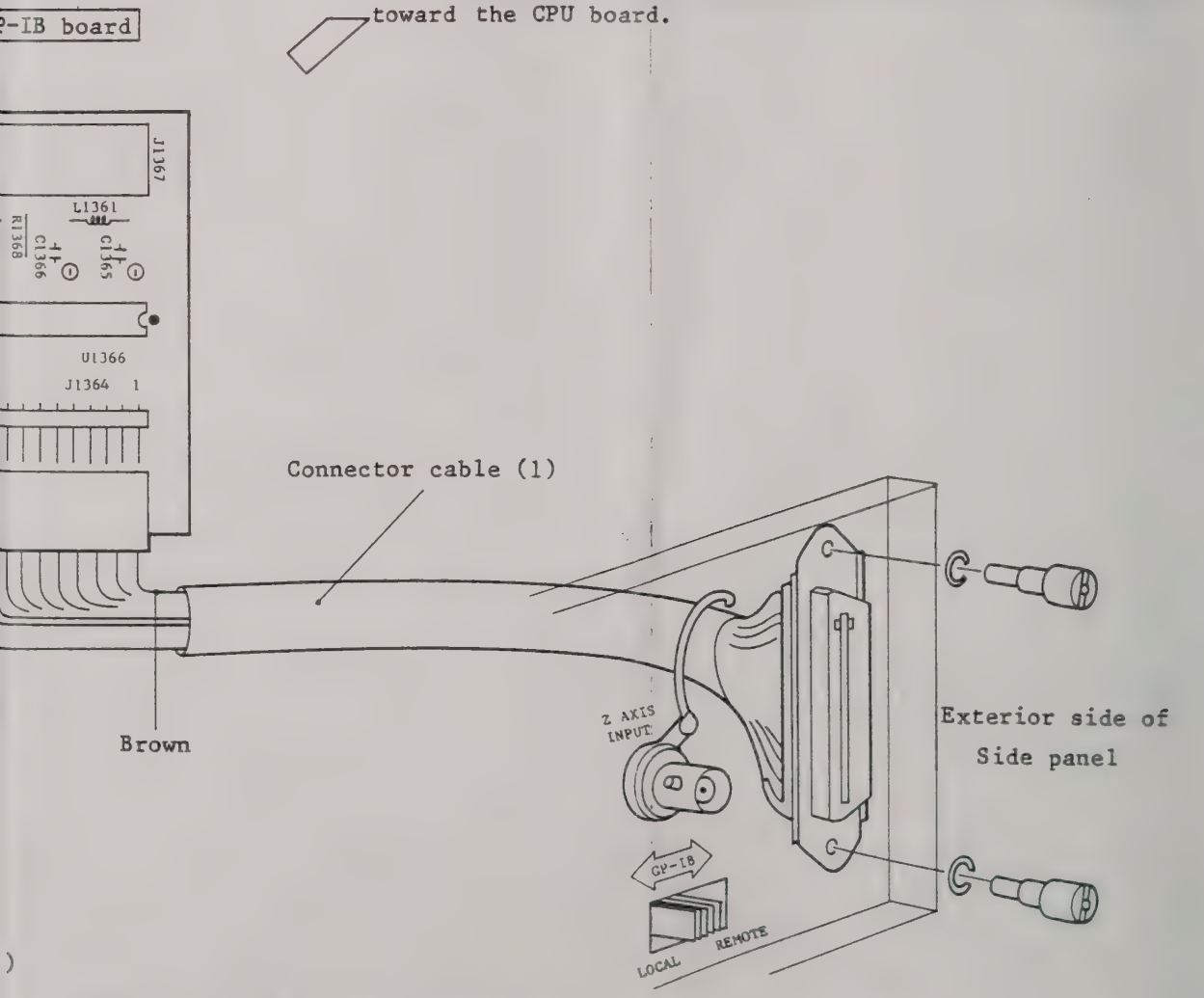

Fig. 4-37 GP-IB board connection

4.6.7 Slide switch installation

The slide switch is for setting the GP-IB interface to REMOTE or LOCAL. The switch is attached on the side panel board and the side panel must be removed for the switch installation.

4.6.7.1 Installation procedure

1. Remove the four screws securing the rear panel and five screws holding the exterior cover shown in Fig. 4-38.

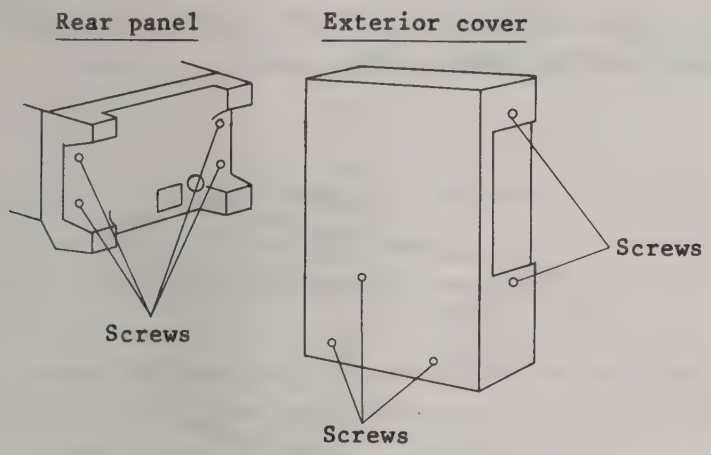

Fig. 4-38 Rear panel and exterior cover securing screws

2. Remove side panel screws and connectors shown in Fig. 4-39.

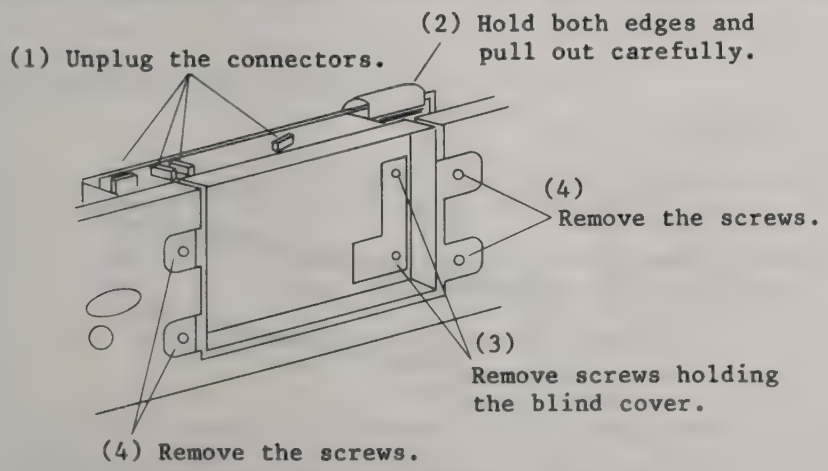

Fig. 4-39 Removing the side panel

The following cables and leads are connected with the side panel and caution must be paid not to damage them.

(1) CH3 signal cable (Shielded cable)
(2) CH1 VARIABLE lead
(3) CH2 VARIABLE lead
(4) Z axis input cable (Shielded cable)
(5) CH2 SIGNAL OUT cable (Shielded cable)
(6) Auto range level cable (Shielded cable)

3. Press the side panel assembly inward slightly and remove it pulling it toward the front panel as shown in Fig. 4-40.

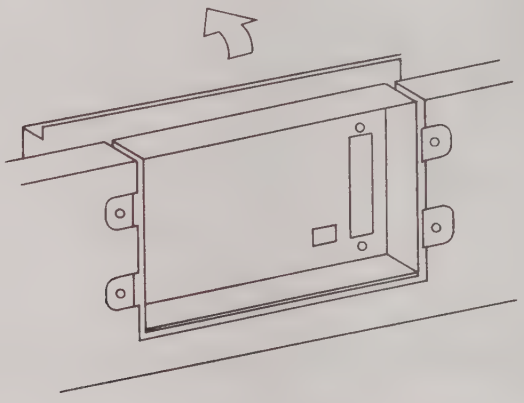

Fig. 4-40 Removing the side panel assembly

4. Disconnect the shield sheet of the side panel as shown in Fig. 4-41.

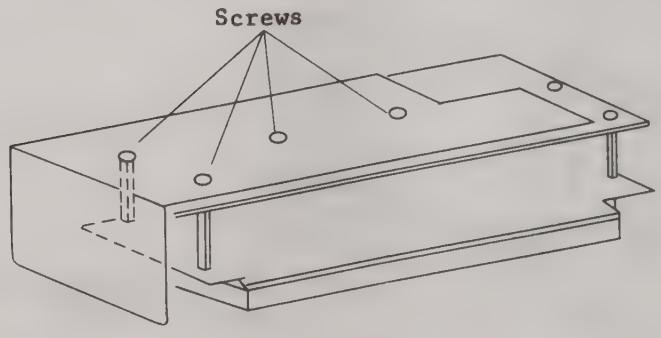

Fig. 4-41 Disconnecting the shield sheet

5. Remove knobs of the side panel by pulling them up and the four screws shown in Fig. 4-42. (Be careful not to damage the knobs when removing them.)

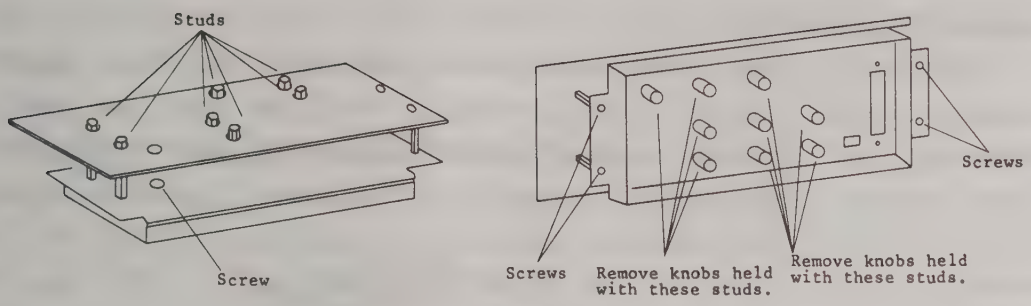

Fig. 4-42 Side panel studs holding knobs and screws

6. Loosen the studs on the printed circuit board side.

7. Widen the distance between the side panel and the printed circuit board. Insert slide switch legs and pins into corresponding holes and firmly solder them. (See Fig. 4-43.) Set the switch to LOCAL.

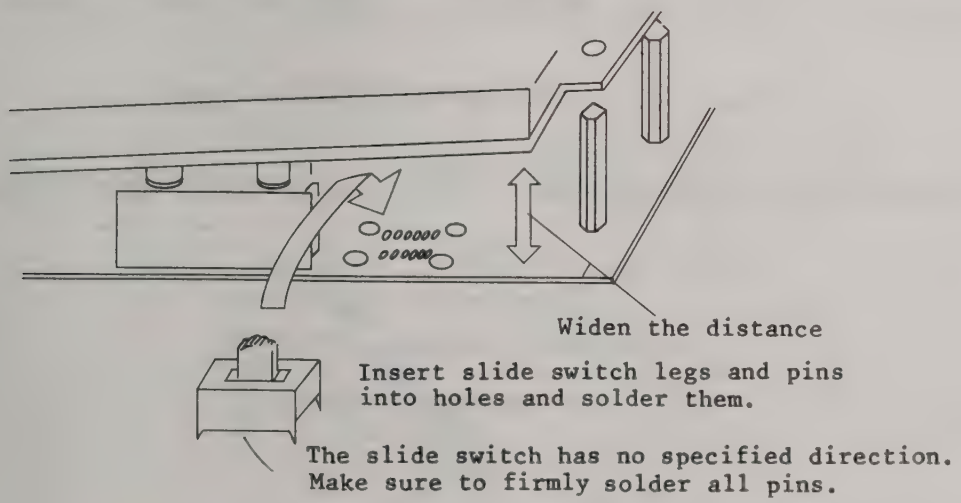

Fig. 4-43 Installing the slide switch

8. When Step 7 is complete, reinstall the shield sheet and tighten the screws. When tightening screws and studs, check that knobs rotate smoothly and the sliding distance of the slide switch is proper.

4.6.8 Connector cable (1) installation

The connector cable (1) inputs the external signal to the GP-IB board via the GP-IB cable.

Installation procedure

1. Prepare the side panel assembly with the slide switch. Secure the connector cable (1) with screws provided. The green lead from the cable (soldering and plating completed) must be grounded to the external cover. Solder the green lead with the ground lug of the Z axis input BNC connector.

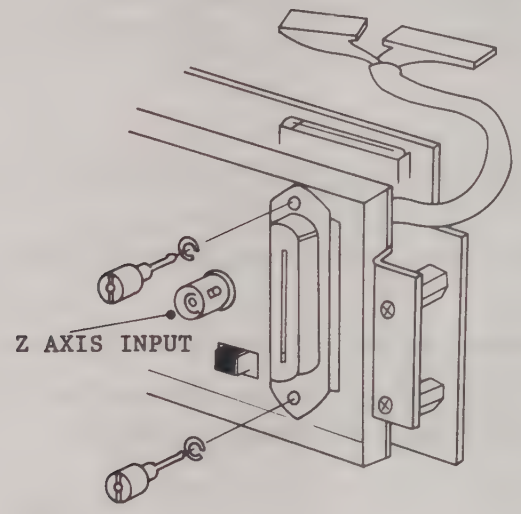

Fig. 4-44 Installing the connector cable (1)

2. Install the side panel assembly with the main body as shown in Fig. 4-45.

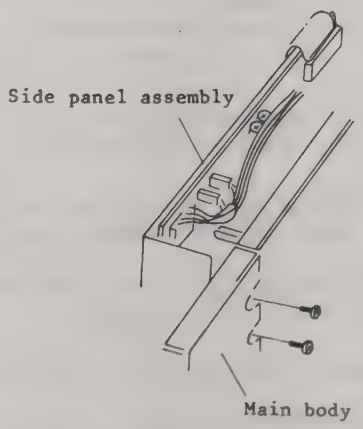

Fig. 4-45 Installing the side panel assembly

Note: Check for shortcircuit of the side panel assembly circuit and solder dust left in the assembly before installing the assembly.

4.6.9 ROM replacement

The VP-5610P carrying the following ID numbers requires the replacement of ROMs on the CPU and character boards.

ID number: 530___A122 through 580___A122

Note: The ROM replacement is not required for those boards having ROMs No. 05925 and 05932. These numbers are subject to change for performance improvement.

Replacement procedure

1. Pull out the character board and replace the ROM.

2. Replace the ROM for the CPU board in the same way.

Note: Be careful not to damage the white, wide connector cable connected with the white connector. Pulling up the white connector slightly causes the outside frame to slide, the lock is released and the connector may be easily removed.

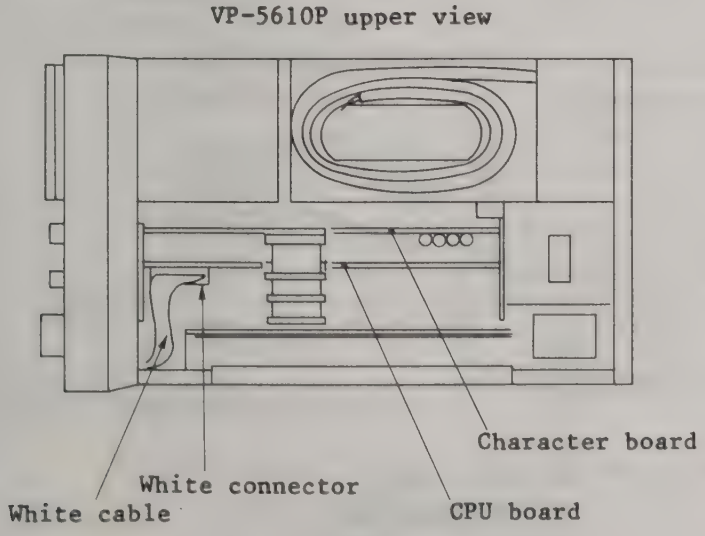

Fig. 4-46 Positions of character and CPU boards

4.6.9 GP-IB board installation

See Fig. 4-37 for the overall connections and GP-IB board installation position. Observe the following procedure:

1. Install the GP-IB board to the card holder closest to the right side panel. Make sure for the correct board direction that the surface with components faces the CPU board.

   Connect the connector cable (2) with the CPU board and then with J1361 of the GP-IB board as described in Fig. 4-37.

2. Insert the connector cable (1) into the clearance between printed circuit boards as shown in Fig. 4-47. Connect the 10-pin connector with J1364 and 8-pin connector with 1363.

3. Pass the white cable to be connected with the CPU board above the GP-IB board.
4. Adjust the length of white cable to be connected with the side panel.
5. Insert the insulation sheet provided into the clearance between the BP-IB board and side panel.

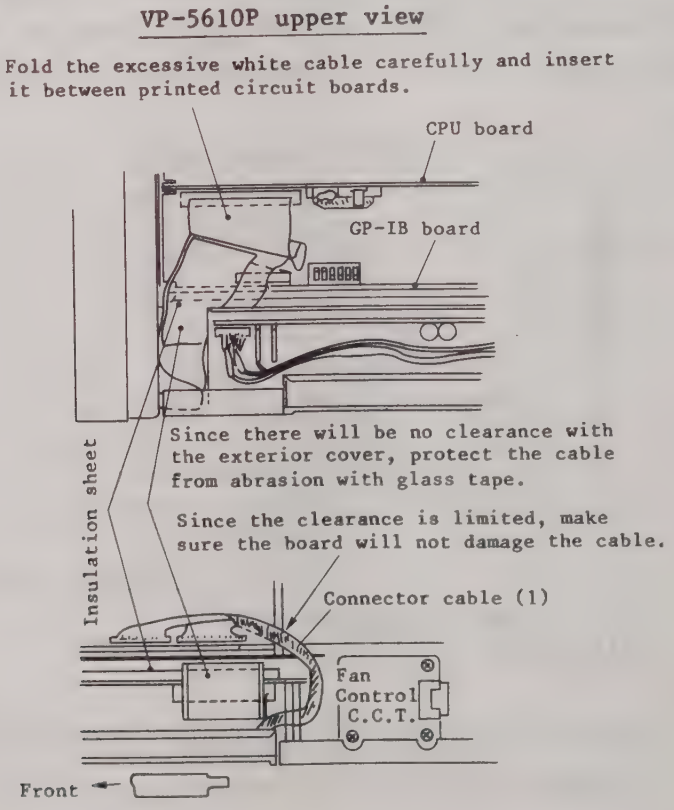

Fig. 4-47 Installing the GP-IB board

4.6.10 GP-IB operation check

When the GP-IB installation is complete, check to see if the interface operates correctly.

Procedure

1. Set the LOCAL REMOTE switch to LOCAL.
2. Simultaneously press CH1 and CH2 GND keys and turn the power supply on. (For to initialize the VP-5610P since the CPU board was disconnected once.) Check that the initial display shown in Fig. 4-48 appears on the screen.

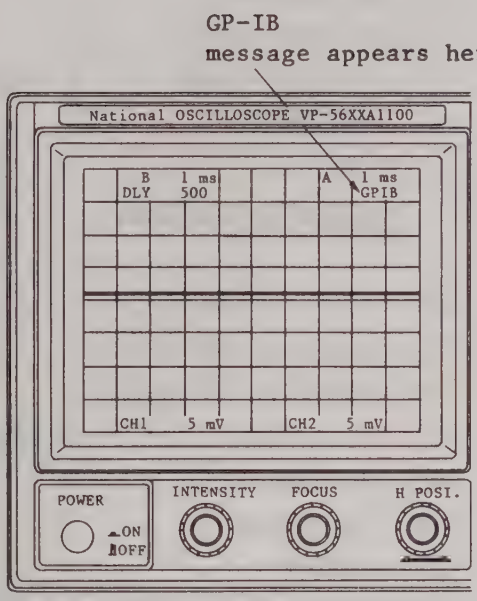

Fig. 4-48 Initial display

3. Set the LOCAL REMOTE switch to REMOTE. Check that the "GPIB" message appears on the screen and no key switch on the front panel functions. (The VP-5610P is set to the remote control mode.)

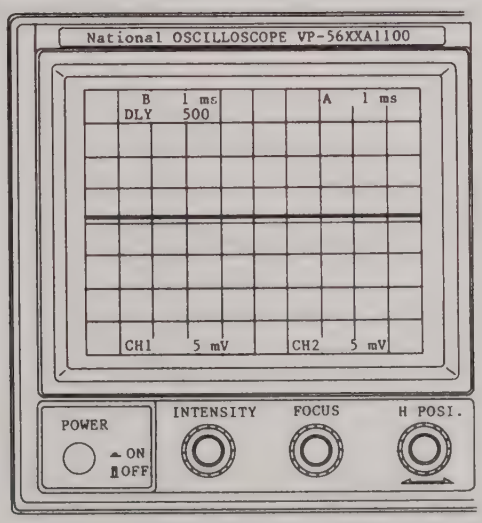

Fig. 4-49 Display in the REMOTE mode

Note that the following controls operate even in the remote control mode:

(1) CH1 POSITION	Front panel
(2) CH2 POSITION	
(3) A TRIGGER LEVEL	
(4) B TRIGGER LEVEL	
(5) INTENSITY	
(6) FOCUS	
(7) HORIZONTAL POSITION	
(8) CH3 POSITION	Side panel
(9) SCALE ILLUMINATION	
(10) CHARACTER INTENSITY	
(11) CH1 VARIABLE	
(12) CH2 VARIABLE	
(14) A VARIABLE	
(15) HOLDOFF	
(16) SEPARATION	

Fig. 4-50 on the next page shows the connectors on the GP-IB board and the signal input or output from or to each pin.

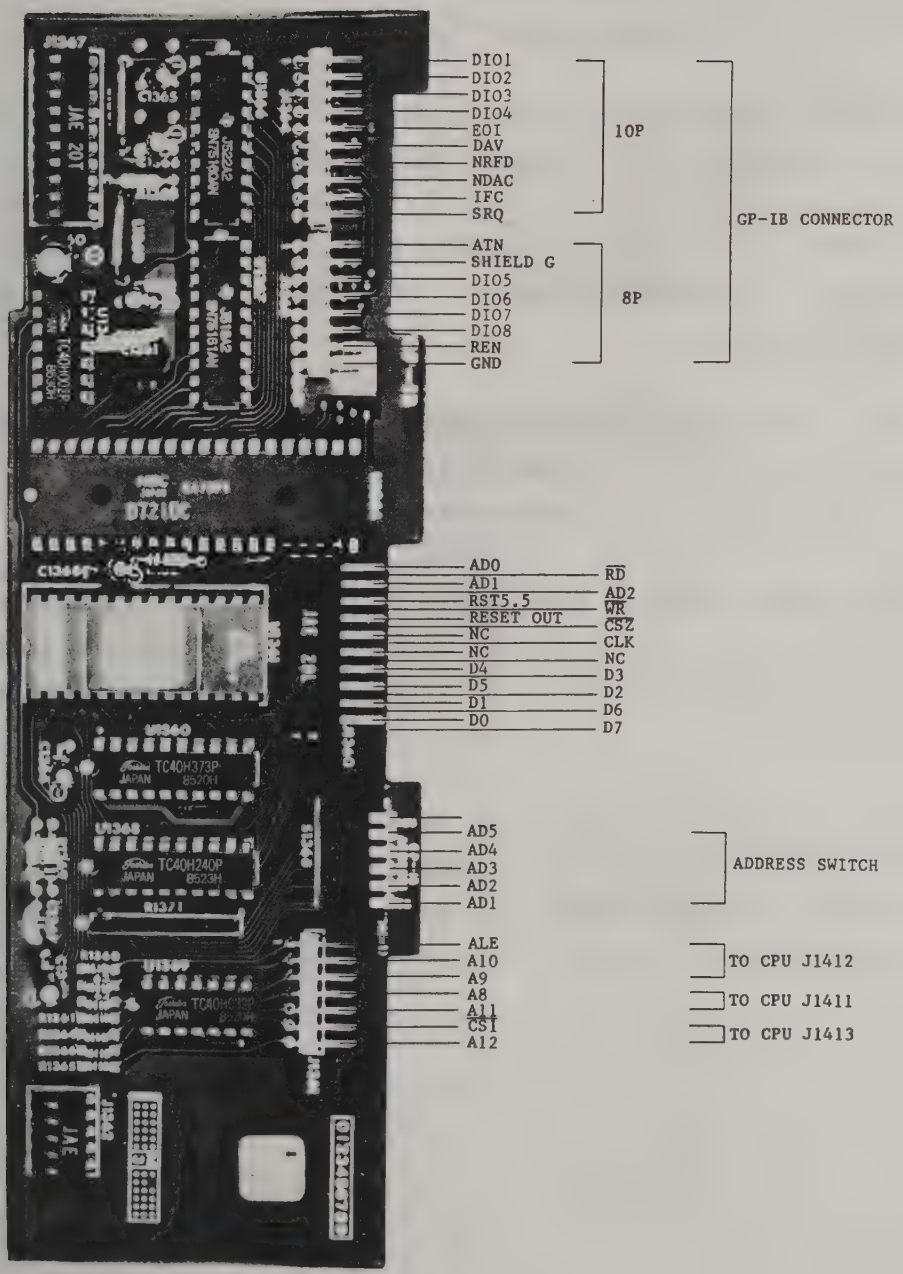

Fig. 4-50 Signals assigned to connectors

4.6.11 GP-IB circuit description

The detail circuit diagram of the GP-IB board is attached on the next page. The GP-IB controller consists of IC U1364, the heart of the controller, bi-directional bus driver and receivers U1366 and U1367.

IC U1364 acts as the exclusive interface between the interface bus specified by IEEE Standard 488-1978 and the microprocessor circuit under the control of the microprocessor. Data bus D0 through D7 are connected with the U1360 input. The address is latched in the data bus with the ALE signal distinguishing the data and address. It output specifies addresses of the GP-IB area in detail.

U1361 is an 8k-byte EPROM in which the software regarding the GP-IB control is stored. U1361 is enabled with the chip select signal of addresses 4000 to 5FFFH decoded in the microprocessor peripheral circuits.

GP-IB address switch S1366 is a binary code switch. The switch terminal is connected with the microprocessor data bus via the U1368 bus buffer. The microprocessor sets U1368 terminals 1 (1G) and 2 (2G) to Lo enabling to read the switch status.

The slide switch for REMOTE and LOCAL mode setting is also connected to U1368 and its data is read out in the same manner as the address switch. When the data read out is LOCAL, key switches on the front panel are released from the GP-IB control and set to the manual mode.

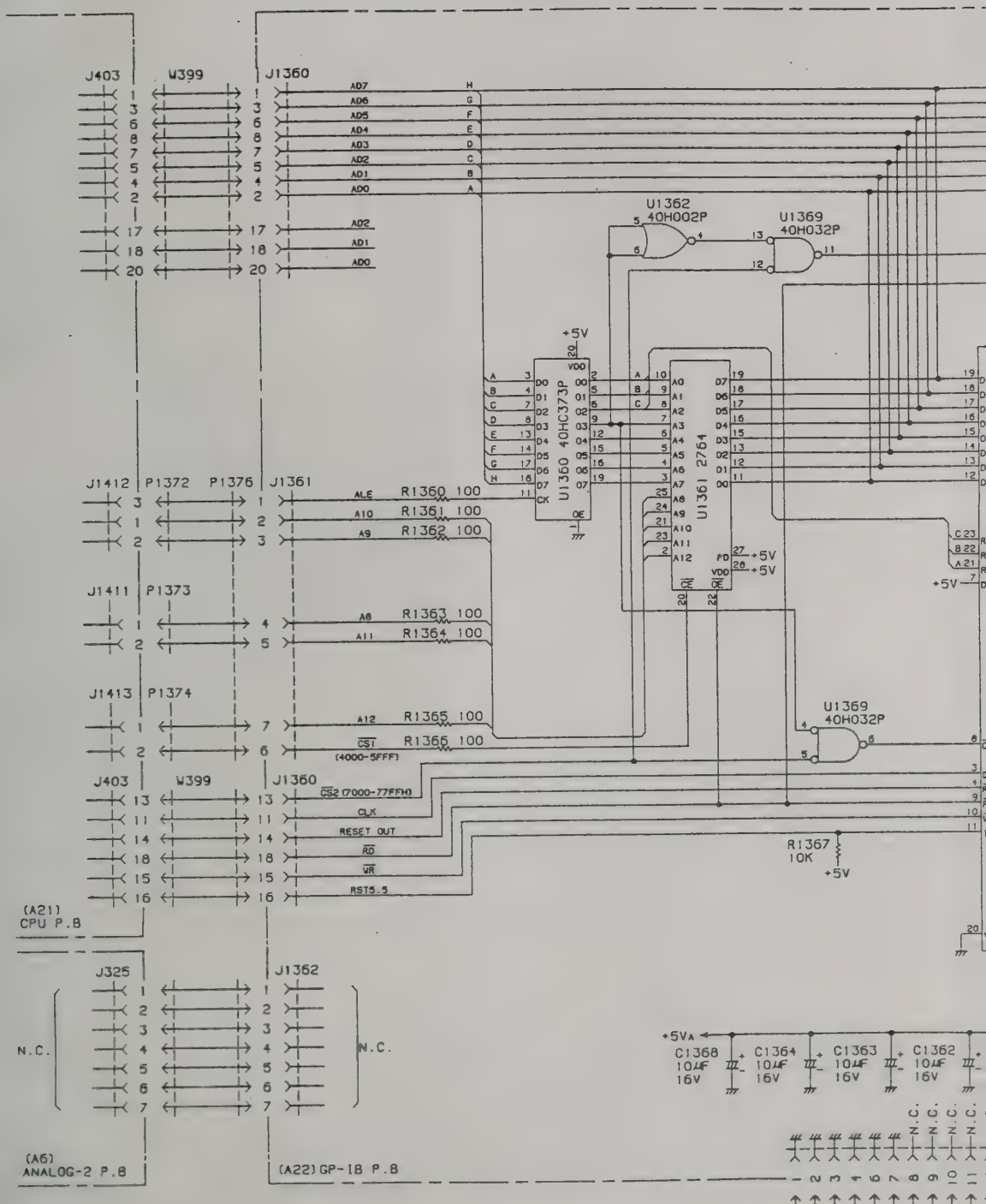
J403
W399
J1360
AD7
AD6
AD5
AD4
AD3
AD2
AD1
AD0
U1362
40H002P
U1369
40H032P
+5V
U1360 40HC373P
U1361 2764
J1412
P1372
P1376
J1361
ALE
A10
A9
R1360 100
R1361 100
R1362 100
J1411
P1373
A8
A11
R1363 100
R1364 100
J1413
P1374
A12
CS1
(4000-5FFF)
R1365 100
R1366 100
CS2 (7000-77FFH)
CLK
RESET OUT
RD
WR
RST5.5
R1367
10K
(A21)
CPU P.B
J325
J1362
N.C.
+5VA
C1368
10μF
16V
C1364
C1363
C1362
(A6)
ANALOG-2 P.B
(A22) GP-IB P.B

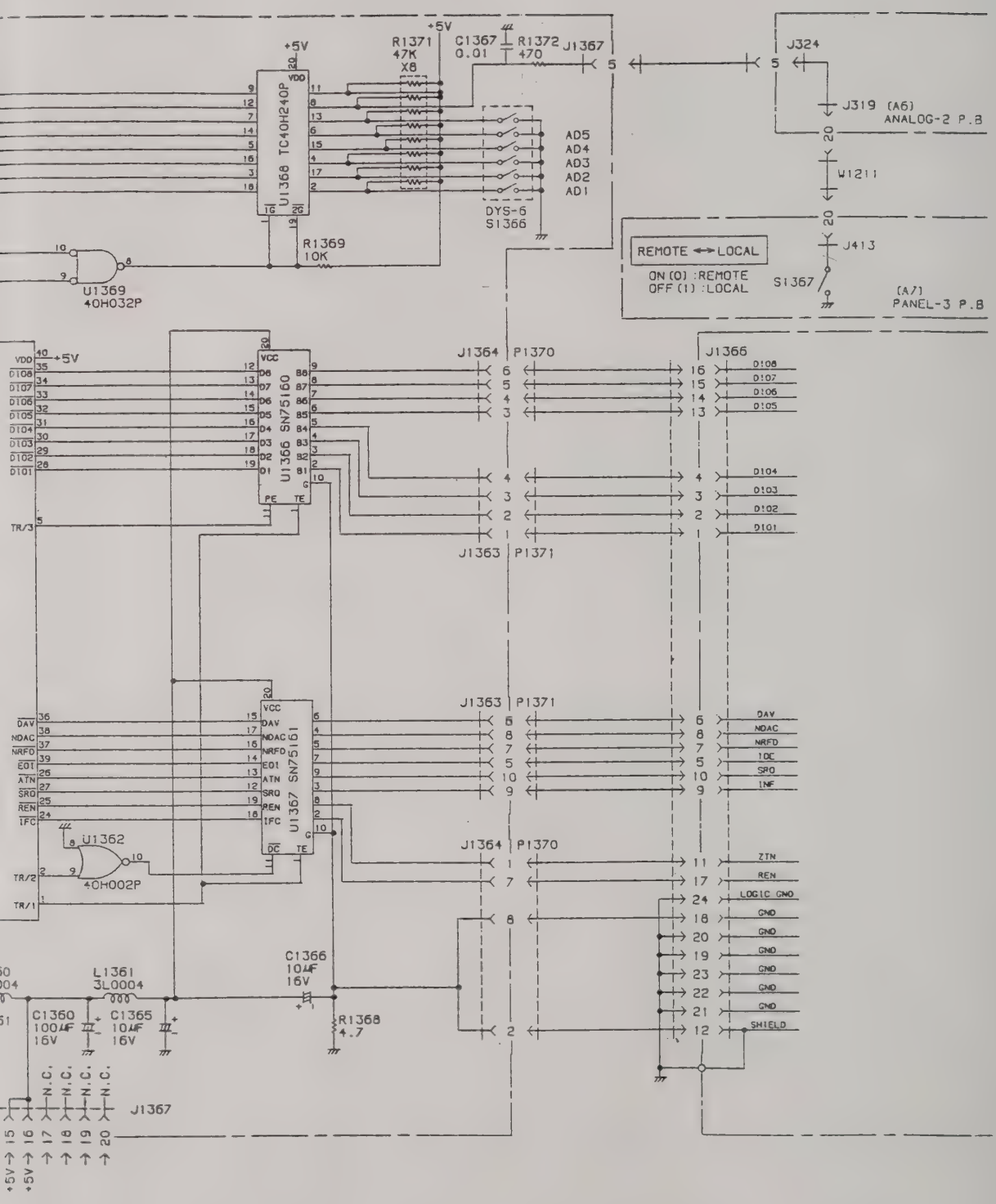
+5V
R1371
47K
X8
C1367
0.01
R1372
470
J1367
5
J324
5
J319 (A6)
ANALOG-2 P.B
20
W1211
20
J413
REMOTE ↔ LOCAL
ON (0) :REMOTE
OFF (1) :LOCAL
S1367
(A7)
PANEL-3 P.B
U1368 TC40H240P
AD5
AD4
AD3
AD2
AD1
DYS-6
S1366
R1369
10K
U1369
40H032P
U1366 SN75160
U1367 SN75161
J1364 P1370
J1366
J1363 P1371
D108
D107
D106
D105
D104
D103
D102
D101
DAV
NDAC
NRFD
EOI
ATN
SRQ
REN
IFC
U1362
40H002P
TR/3
TR/2
TR/1
C1366
10μF
16V
L1361
3L0004
C1360
100μF
16V
C1365
10μF
16V
R1368
4.7
ZTN
LOGIC GND
GND
SHIELD
N.C.
J1367

5. CIRCUIT DESCRIPTION

5.1 GENERAL

In the General Section, circuit block functions are described followed by detailed circuit operations using block diagrams.

The built-in microprocessor controls all functional blocks of the VP-5610P. Control operations on the front and side panels are detected by the microprocessor which, in turn, sends commands to respective blocks. The detailed microprocessor description will be given in the latter Section. Here, the overall block diagram showing the fundamental functions is shown in Fig. 5-1.

Input signals are supplied to the CH1 and/or CH2 INPUT connectors. The input coupling and deflection coefficient are set for each channel. The amplitude of displayed waveform is accurate because of the exact attenuator operation provided for each channel.

Attenuators are connected with buffer amplifiers converting the high-impedance inputs to low-impedance output. Input signals are sent to the vertical preamplifier after the impedance conversion.

The vertical preamplifier consists of the amplifier, variable sensitivity setting, and internal trigger pickoff circuits. The vertical positioning circuit is included in the next stage which is followed by the channel switching circuit.

The polarity of CH2 preamplifier is switchable, thus the polarity of CH2 input signal may be inverted before sending to the next stage. This arrangement allows a display of CH2 input with inverted polarity and the algebraic difference between CH1 and CH2 input signals (when the V MODE is ADD) may be directly displayed.

The diode switching circuit is used as output circuit of vertical preamplifiers and the input signals are selected with the V MODE switching logic circuit. Signals of selected channels, CH1, CH2 and/or CH3, are sent to the vertical main amplifier via the delay line driver and delay line circuits.

The signal supplied through the delay line arrives at the input stage of the vertical main amplifier, which includes the separation, bandwidth limit, and vertical character signal superpose circuits. The separation circuit vertically separates the A sweep and B sweep traces in the alternate sweep mode. The vertical character signal superpose circuit is provided for the digital display of deflection coefficient and sweep times by superposing the character signal on the waveform signal. The bandwidth limiter switches the system from the basic 100 MHz to 20 MHz.

In the second stage of vertical amplifier, the signals are amplified and sent to the last stage. They are again amplified in the last stage before supplying to the CRT vertical deflection plates.

The vertical system is controlled by the vertical switching logic and chop blanking circuits. The vertical system operation is determined with the V MODE key setting on the front panel. For a single trace display, select either one of CH1, CH2 or CH3. In the multi-trace mode, two or more channels selected from CH1, CH2 and CH3 are displayed alternately or in a chopped mode (one sweep is switched among selected 2 or 3 channels at a fixed repetition rate). When the ADD key is turned on, the CH1 and CH2 signals are algebraically added or subtracted depending on the CH2 POLARITY key.

The chop blanking circuit provides the blanking signal to control the Z axis amplifier operation. The blanking signal is used to eliminate the unwanted waveform of the transient period during switching 2 or 3 channels in the chop mode. Thus, easy-to-observe chopped trace is displayed on the screen.

The channel 3 input may also be connected with the connector labeled as CH3 INPUT on the side panel. The external Z axis signal is summed with other Z axis signals to determine the intensified portion of the displayed trace.

The trigger signal generator produces the trigger pulse causing the triggering. The trigger signal source may be selected from CH1 input, CH2 input, CH3 input, signal currently displayed (NORM mode) and the mains power supply (LINE mode). The trigger signal generator consists of the trigger level, trigger amplifier, trigger slope, trigger coupling and trigger source circuits.

When the trigger pulse output from the trigger signal generator arrives at the A sweep generator, a ramp signal for the A sweep is generated. The A sweep and CRT unblanking signals are controlled with the horizontal display mode setting.

The B sweep generator produces the sweep ramp when the A sweep ramp arrives at the level specified with the parameter entered with the DELAY TIME POSITION. In the B sweep circuit, the B sweep and CRT unblanking signals are controlled with the horizontal display mode setting on the front panel.

When the A sweep is set to the AUTO sweep mode, the automatic sweep circuit is activated to cause the A sweep if a trigger pulse does not arrive after 20 ms from the end of holdoff time. The automatic sweep signal causes the A sweep ramp on behalf of the trigger signal and the unblanking signal is also generated. Thus, a trace is displayed on the screen even in the absence of the trigger signal. When the NORM sweep mode is selected, however, the automatic sweep circuit stops its operation and the A sweep is caused only with the trigger pulse output from the A trigger generator.

In the SINGLE mode, only a single sweep is generated upon arrival of a trigger pulse. After that, the sweep is not produced until the SINGLE sweep key is pressed and a trigger pulse arrives next time.

The sweep ramp signal from the A sweep or B sweep circuit is amplified to the level sufficient to provide the horizontal deflection in the horizontal amplifier. The horizontal amplifier consists of the horizontal preamplifier and main amplifier. The horizontal preamplifier consists of the horizontal positioning, input signal switching and character signal superpose circuits.

The horizontal main amplifier includes the x10 magnification circuit; when activated, the A and B time coefficients are reduced by 10 times, that is, the sweep speed is increased by ten times. The circuit is activated when the x10 MAG key on the front panel is turned on and the trace is magnified by 10 from the center of the screen.

The Z axis amplifier controls the intensified trace portion and blanking level. The current input signals and external Z axis input signals from A and B sweep circuits and the chop blanking signals from the chop blanking circuit of V MODE circuit are mixed in the Z axis amplifier. The resultant output determines the intensified portion of the displayed trace.

The CRT circuit includes the feedback oscillator, high voltage multiplier and high voltage regulator. The regulator controls the current flowing the oscillator for constant high-voltage output. When a current flows the primary winding of the high-voltage transformer, an AC current is included in the secondary winding, which is supplied to the high-voltage rectifier block. The currents included in the secondary windings are also used to heat the CRT, control the focus and drive the DC restorer for CRT bias.

The high-voltage rectifier, DC restorer, focus voltage and cathode voltage circuits are combined as the high-voltage block and are shielded in the high-voltage case. The high-voltage output from the rectifier is directly supplied to the CRT anode. The DC restorer increases the output level from the Z axis amplifier, which is supplied to the CRT grid for display intensity control.

The low voltage power supply block for the oscilloscope consists of switching regulators for +5 V, +8.6 V, -8.6 V, +30 V, +70 V, +11 V, and -11 V power supplies. The ±8.6 V and +30 V power supplies are stabilized by IC regulators. The fan is driven with the unregulated +11 V power supply.

The calibrator output is an 1-kHz square-wave that is adjusted to 0.3 V. The signal is fed to the CAL terminal on the side panel. The output is utilized for checking basic operation and calibration of vertical sensitivity and probes.

VP-5610P

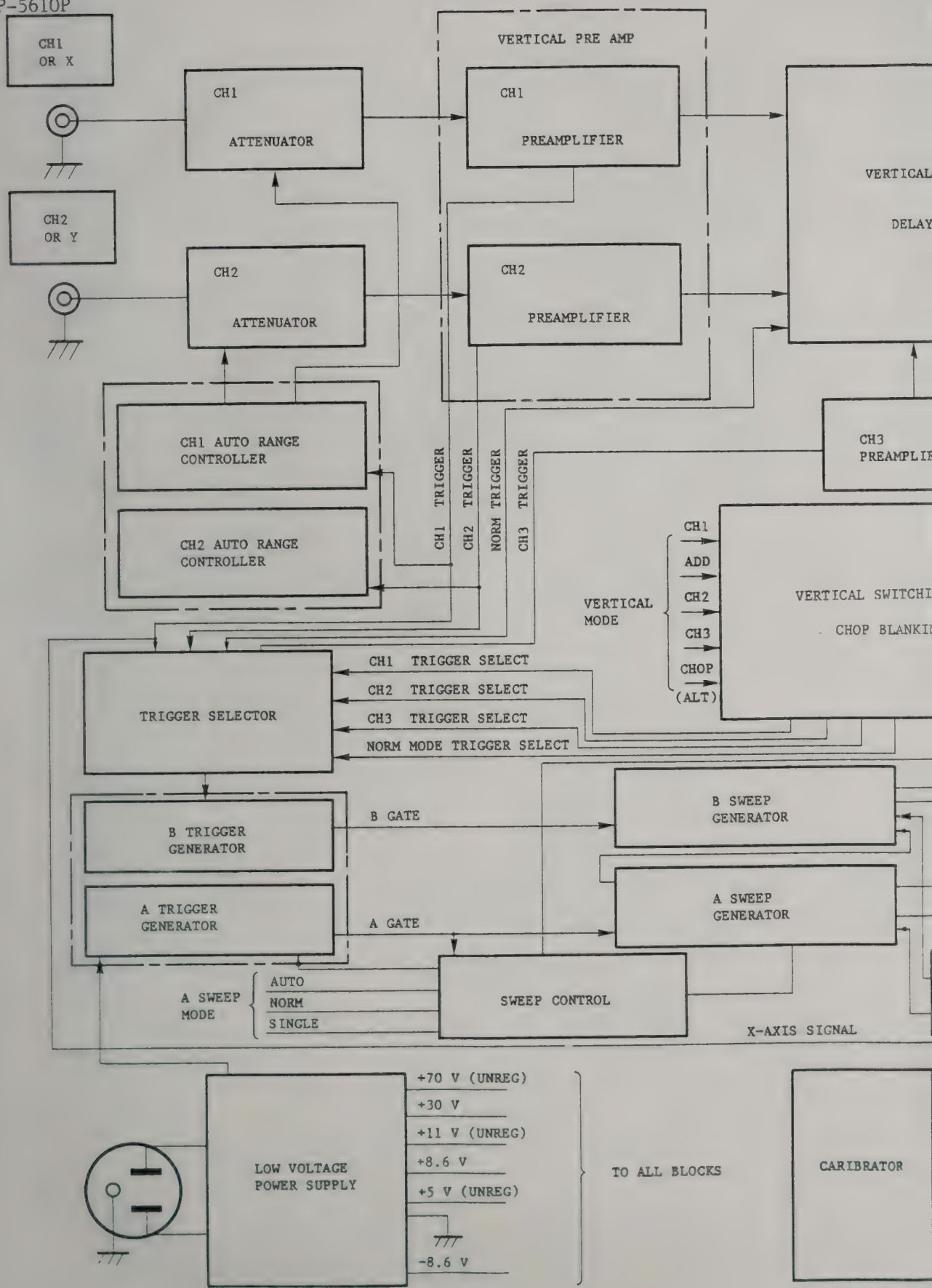
CH1
OR X
CH2
OR Y
CH1
ATTENUATOR
CH2
ATTENUATOR
VERTICAL PRE AMP
CH1
PREAMPLIFIER
CH2
PREAMPLIFIER
VERTICAL
DELAY
CH3
PREAMPLIF
CH1 AUTO RANGE
CONTROLLER
CH2 AUTO RANGE
CONTROLLER
CH1 TRIGGER
CH2 TRIGGER
NORM TRIGGER
CH3 TRIGGER
CH1
ADD
CH2
CH3
CHOP
(ALT)
VERTICAL
MODE
VERTICAL SWITCHI
CHOP BLANKI
TRIGGER SELECTOR
CH1 TRIGGER SELECT
CH2 TRIGGER SELECT
CH3 TRIGGER SELECT
NORM MODE TRIGGER SELECT
B TRIGGER
GENERATOR
A TRIGGER
GENERATOR
B GATE
A GATE
B SWEEP
GENERATOR
A SWEEP
GENERATOR
A SWEEP
MODE
AUTO
NORM
SINGLE
SWEEP CONTROL
X-AXIS SIGNAL
LOW VOLTAGE
POWER SUPPLY
+70 V (UNREG)
+30 V
+11 V (UNREG)
+8.6 V
+5 V (UNREG)
-8.6 V
TO ALL BLOCKS
CARIBRATOR

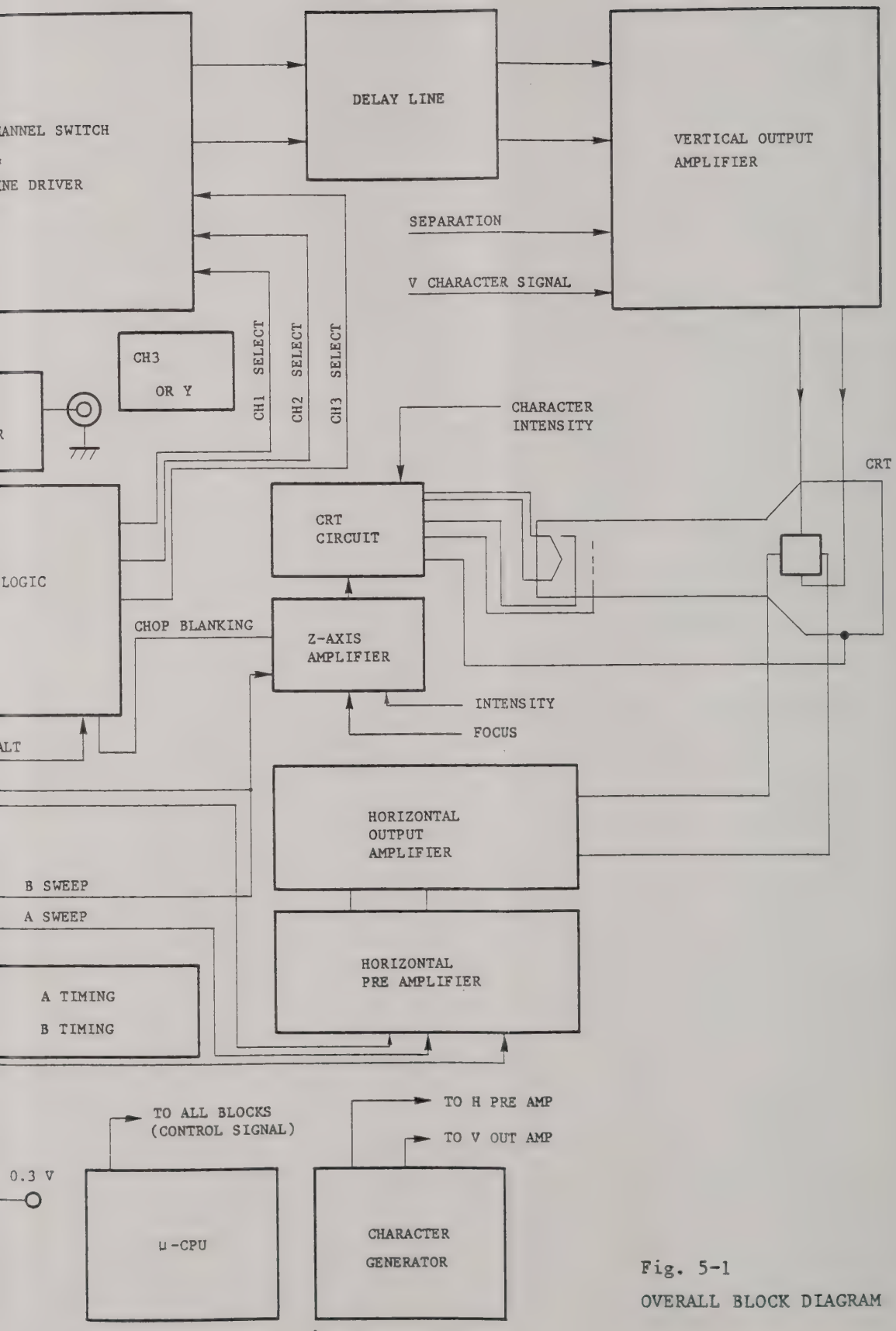

Fig. 5-1
OVERALL BLOCK DIAGRAM

5.2 DETAILED CIRCUIT DESCRIPTION

5.2.1 CH1 and CH2 attenuators

The attenuators for CH1 and CH2 are identical in their compositions except the component numbers. The CH1 attenuator, therefore, will be described. Fig. 5-2 shows the block diagram of CH1 attenuator.

5.2.1.1 Input coupling

The input signal first goes to the AC-GND-DC coupling switcher. When the DC key of the AC-GND-DC key group is turned on, the input signal is supplied to the high-Z attenuator via R11//C10 and R71//C71. When the AC key is turned on, the input signal goes through R11/C10 and then serially connected R72//C72 and C11 before arriving the high-Z attenuator. Capacitor C11 functions to block the DC component of input signal.

When the GND key is turned on, the high-Z attenuator is grounded and the signal path from the input connector is opened. The GND key is provided so that the ground coupling may be obtained without disconnecting the input signal.

Note: The "//" symbol means that R11 and C10 are connected in parallel.
High-Z and low-Z indicate the high- and low-impedance, respectively.

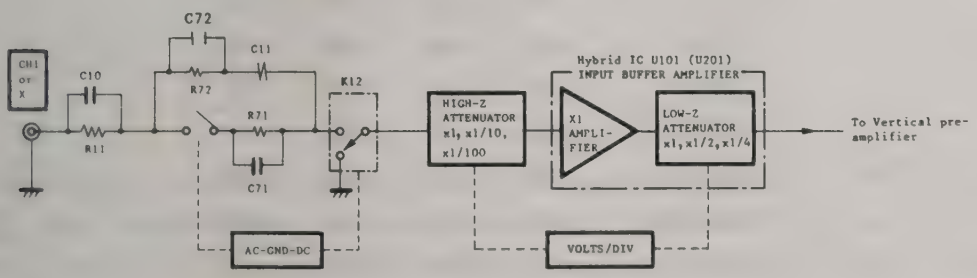

Fig. 5-2 Schematic diagram of CH1 input attenuator

5.2.1.2 Input attenuator

The vertical deflection coefficient is determined by the VOLTS/DIV setting of that channel. The fundamental vertical deflection coefficient of the VP-5610P is 5 mV/div. When the deflection coefficient of more than 5 mV/div is set, the accurate (error rate of less than 1%) voltage divider with compensated frequency characteristics is connected to the signal path and the input signal voltage is accurately divided before it is sent to the latter stage. The deflection coefficient is displayed at the lower left (lower right for CH2) of the screen.

The high-Z attenuator has x1/1, x1/10 and x1/100 attenuation systems and the low-Z attenuator has x1/1, x1/2 and x1/4 systems, which are combined according to volts/div settings.

The high-Z attenuator has cascade connected x1/1 and x1/100 voltage dividers in its front stage and the rear stage includes x1/1 and x1/10 voltage dividers. These voltage dividers are connected by the relay element according to the volts/div setting as described in Table 5-1.

Table 5-1 High-Z attenuator combinations

Volts/div	Front stage		Rear stage	
	x100	x1	x10	x1
5 mV	OFF	ON	OFF	ON
10 mV	OFF	ON	OFF	ON
20 mV	OFF	ON	OFF	ON
50 mV	OFF	ON	ON	OFF
0.1 V	OFF	ON	ON	OFF
0.2 V	OFF	ON	ON	OFF
0.5 V	ON	OFF	OFF	ON
1 V	ON	OFF	OFF	ON
2 V	ON	OFF	OFF	ON
5 V	ON	OFF	ON	OFF
10 V	ON	OFF	ON	OFF

The low-Z attenuator has three stages of x1/1, x1/2 and x1/4 and these voltage dividers are included in the hybrid IC of the input buffer amplifier. Its output is supplied to the next stage via the relay element. The voltage dividers are connected with the signal path according to the volts/div setting as shown in Table 5-2.

Table 5-2 low-Z attenuator combinations

Volts/div	Low-Z Attenuator		
	x1	x2	x4
5 mV	ON	OFF	OFF
10 mV	OFF	ON	OFF
20 mV	OFF	OFF	ON
50 mV	ON	OFF	OFF
0.1 V	OFF	ON	OFF
0.2 V	OFF	OFF	ON
0.5 V	ON	OFF	OFF
1 V	OFF	ON	OFF
2 V	OFF	OFF	ON
5 V	ON	OFF	OFF
10 V	OFF	ON	OFF

The high-Z attenuator mainly consists of two printed circuit boards having the relay element and electro-magnetic component to drive the relay element. These boards are compact and light-weight that are driven by the +5 V power and logic data from CPU circuit. A small-sized reed relay in the case is used for the low-Z attenuator.

5.2.1.3 Input buffer amplifier

The CH1 high-Z attenuator supplies its output to buffer amplifier U101 via R25 and RT25. U101 is composed of hybrid IC and is a single-line amplifier having x1 gain including the source follower and emitter follower circuits, low-Z attenuator at the output end and DC feedback circuit reducing the drift of the x1 amplifier.

The diode installed in the system protects the IC from excessive input voltage and maintain the voltage at a specified level. The AC gain potentiometer compensates the tilt or sag of 100 Hz square-wave. The DC level potentiometer controls the circuit so that changing the volts/div value does not vertically shift the trace. The shift is caused by the output offset voltage. The low-Z attenuator has a 50 Ω output impedance and is connected with the next stage.

5.2.2 Vertical preamplifier

CH1 and CH2 vertical preamplifiers are identical except component reference numbers and the polarity switching circuit added in the CH2 system. Fig. 5-3 shows the block diagram of CH1 vertical preamplifier.

5.2.2.1 CH1 preamplifier

The preamplifier is also a hybrid IC, which amplifies the single-ended signal supplied from the low-Z attenuator and converts it into a differential output signal. Resistor R107 adjusts the CH1 gain referring to the fundamental 5 mV/div deflection coefficient.

The CH1 VARIABLE is adjusted with the resistor connecting two collectors of the emitter-grounded stage in the first stage of the CH1 preamplifier and the resistor between the drain and source of the field-effect transistor connected with the first stage in parallel.

The compensation network for compensating square-wave characteristics is positioned between U102 pins 23 and 25 in the first stage. The network for the second stage is positioned between U102 pins 12 and 13. Resistor R108 secures the trace stability minimizing the trace vertical shift caused by rotating the CH1 VARIABLE control.

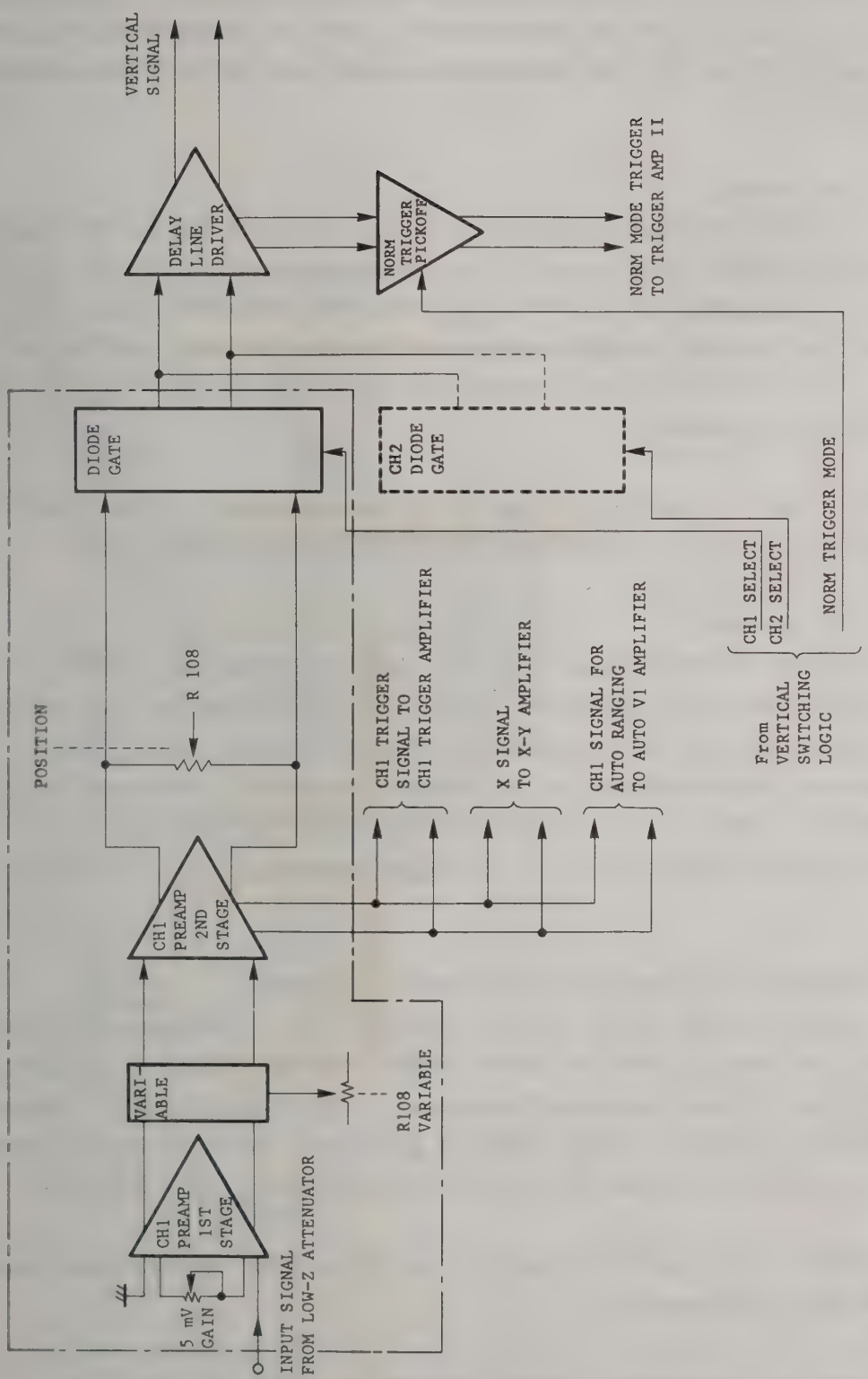

Fig. 5-3 Schematic diagram of vertical Preamplifier

The second stage of the emitter-grounded stage derives a differential signal of 1.4 to 1.9 times the input signal, which is distributed to corresponding hybrid ICs as CH1 internal trigger, X-axis in the X-Y mode, and auto ranging signals.

5.2.2.2 Positioning

The variable resistor connected to the collectors of the second stage of the emitter-grounded stage controls the trace position. The sum of the current flowing pins 8 and 9 that is determined by the input signal current level and the variable resistor setting determines the trace position on the screen. The trace position is variable by approximately ±8 divisions from the center of the screen.

The end of the second stage is the base-grounded circuit and the collectors are connected to the next stage, the diode switching gate.

5.2.2.3 CH2 polarity

When the CH2 POLARITY key on the front panel is turned on (INVERT), the base-grounded circuit at the signal invert side is activated and the original base-grounded circuit is disconnected from the signal path. Since the collectors are cross-connected to the stage output point, the signal polarity is inverted. The pin 5 of the CH2 invert terminal is conncected with the vertical switching logic circuit, while the terminal of CH1 is pulled up to +5 V.

5.2.2.4 Vertical switching and chop blanking circuits

The second stages of CH1 and CH2 preamplifiers, base-grounded output circuits, are made up with the diode gates. The diode gate is required as the switching circuit for the LED display of the selected V MODE channel. For example, when CH1 of the V MODE is selected, the CH1 signal passes through the diode gate while CH2 and CH3 signals do not. (See Fig. 5-4.)

When ADD of the V mode is selected, the CH1 and CH2 signals pass through the diode gate simultaneously.

The vertical switching circuit diagram is shown in Fig. 5-5. The waveform of the channel selected with the V MODE key group will be displayed

on the screen. In the chop mode, the chop blanking signal is output to the Z axis amplifier, which turns off the Z axis amplifier during channel switching period so that the transient unwanted waveform does not appear on the screen.

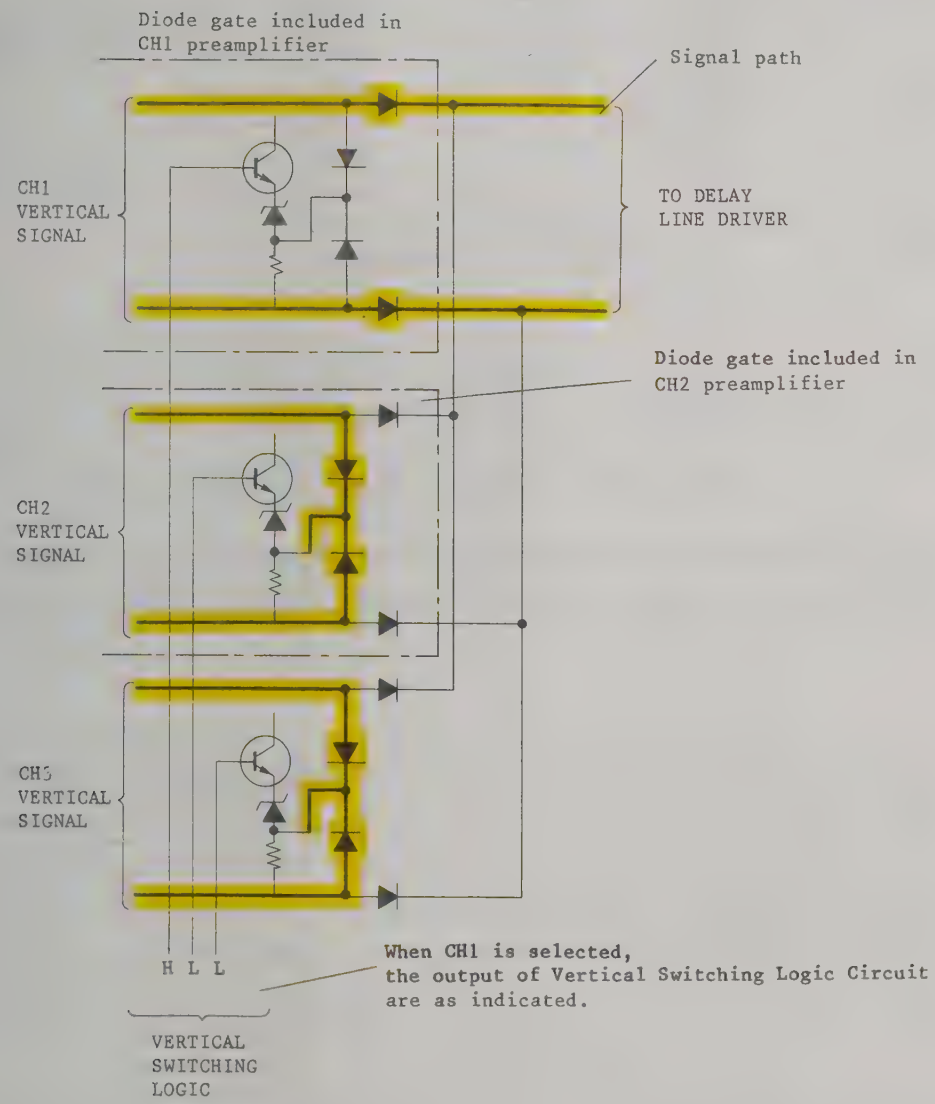

Fig. 5-4 Operation of diode gate

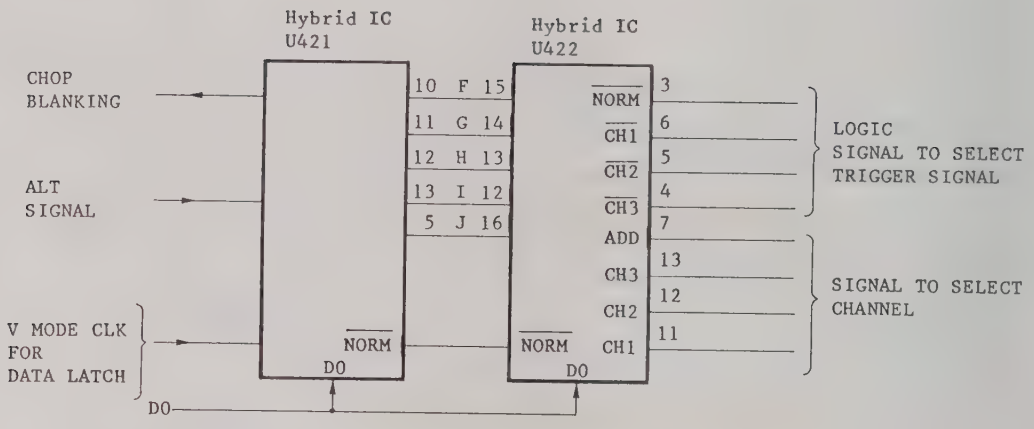

Fig. 5-5 V MODE circuit diagram

Table 5-3 Relationship between V MODE and R421 and U422

V MODE		U421 F	U421 G	U421 H	U421 I	U421 J	U422 CH1	U422 CH2	U422 CH3	U422 ADD
	CH1	L	H	H	H		H	L	L	L
	CH2	H	L	H	H		L	H	L	L
	CH3	H	H	L	H		L	L	H	L
CHOP	CH1 & CH2	Selected channels are repetitively switched repeating Hi and Lo.			L		Selected channels are repetitively switched repeating Hi and Lo.			L
CHOP	CH2 & CH3				L					L
CHOP	CH3 & CH1				L					L
ALT	CH1 & CH2	Lo for the channel currently being sweeped. Other channels are Hi.			L		Lo for the channel currently being sweeped. Other channels are Hi.			L
ALT	CH2 & CH3				L					L
ALT	CH3 & CH1				L					L
CHOP	CH1 & CH2 & CH3	Selected channels are repetitively switched repeating Hi and Lo.			L		Selected channels are repetitively switched repeating Hi and Lo.			L
ALT	CH1 & CH2 & CH3	Lo for the channel currently being sweeped. Other channels are Hi.			L		Lo for the channel currently being sweeped. Other channels are Hi.			L
	ADD				L		H	H	L	H

Table 5-4 Relationship between trigger signal source and U422 output

Trigger signal source	U422			
	$\overline{\text{NORM}}$	$\overline{\text{CH1}}$	$\overline{\text{CH2}}$	$\overline{\text{CH3}}$
NORM	L	H	H	H
CH1	H	L	H	H
CH2	H	H	L	H
CH3	H	H	H	L

5.2.2.5 Delay line driver

The delay line driver is a shunt feedback, one-stage hybrid IC that the emitters are commonly connected. The current differential input signal is converted to the voltage signal to drive the delay line.

The NORM trigger signal is extracted from the output by voltage division process. The NORM trigger amplifier is integrated as a part of the delay line driver IC.

5.2.2.6 Delay line

The delay line has a delay time factor of approximately 100 ns. The 100 ns is sufficient for the horizontal circuit causes a sweep based on the ramp obtained from the trigger pulse before the trigger signal arrives at the vertical deflection plates when triggering is instructed with the internal trigger source (CH1, CH2, CH3 or NORM). The delay line is required for measuring the signal leading edge.

5.2.3 Vertical main amplifier

The vertical main amplifier increases the signal level sufficient to drive the CRT vertical deflection plates. Fig. 5-6 shows the block diagram of vertical main amplifier.

5.2.3.1 Bandwidth limiter

The bandwidth limiter is incorporated to limit the bandwidth of the vertical output amplifier from normal 100 MHz to 20 MHz to reduce the influence by the high-frequency component included in the low-frequency signal such as the noise spectrum. The bandwidth limiter is turned on or off with the logic signal caused by operating the BW key switch on the front panel. When the key is on, CR595 and CR596 are conducted resulting in connected C595 and C596 between the signal paths and the high-frequency component is shunt to the vertical ground.

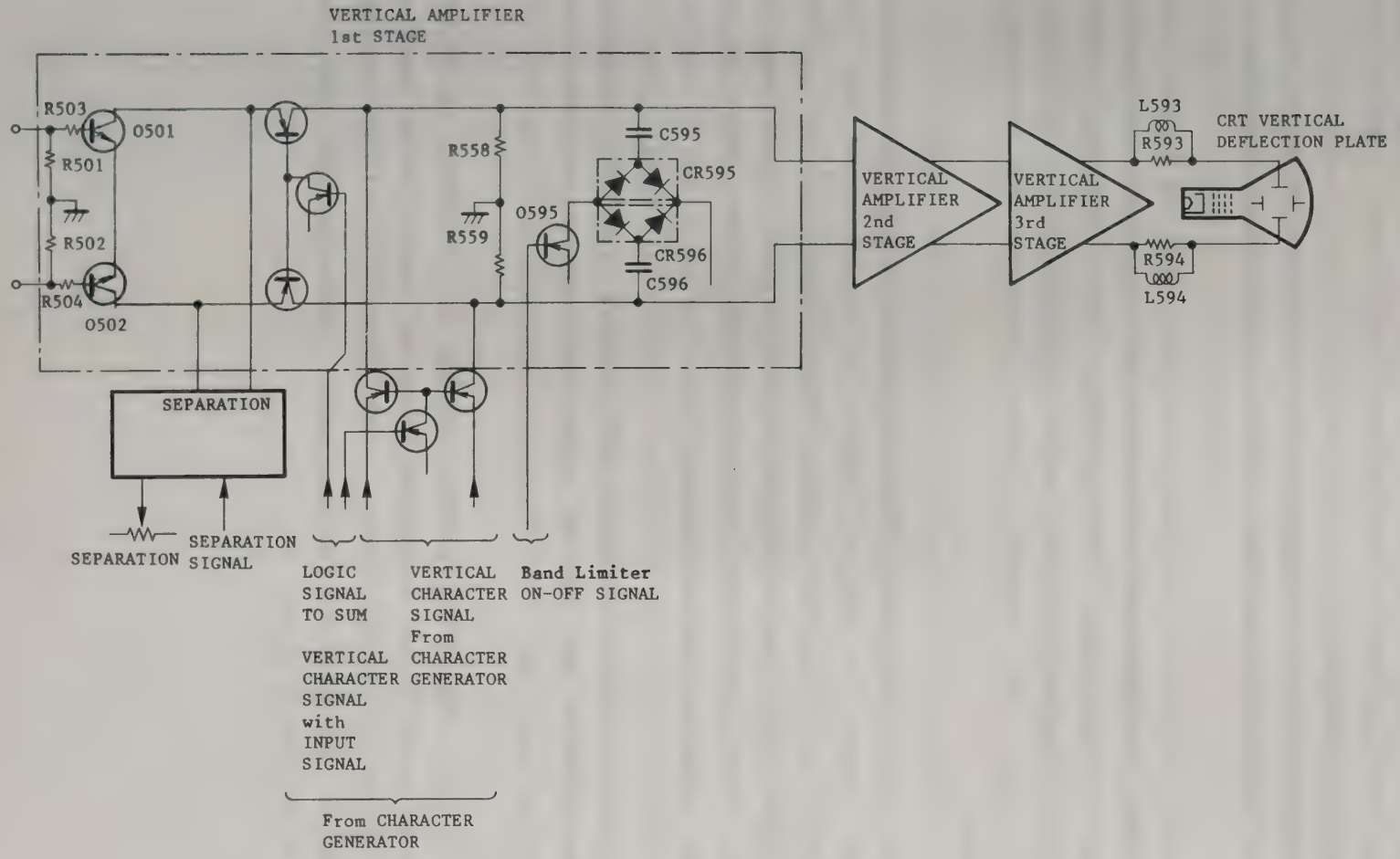

Fig. 5-6 Schematic diagram of vertical output Amplifier

5.2.3.2 Separation and character superpose circuits

Resistors R501 and R502 are terminations of delay line. R503 and R504 are used as dumping resistors.

Separation and character signal superpose circuits are connected with the fist stage of the vertical amplifier, which have the following functions:

Separation: In the ALT (alternate sweep) mode, both the A sweep trace and B sweep that magnifies the portion of the A sweep are simultaneously displayed on the screen. The separation circuit vertically separate these two traces on the screen, which is operated with the B sweep, negative pulse. The separation control determines the distance of separation.

Character signal superpose: This base-grounded circuit superposes the character signal for digital display of volts/div and A/B time coefficients on the waveform signal. The character signal is a current differential signal and is supplied to the character signal superpose circuit. The signal switcher switches the base-grounded stages for the character signal and waveform signal.

On the emitter side of emitter-grounded circuits of the first and second stages, the networks for the DC shift and frequency characteristics compensation are installed.

On the third stage, the power transistor is connected in cascade amplifying the signal (mixed waveform and character signals) before supplying to the CRT vertical deflection plates. L593, R593, L594 and R594 connected in parallel on the output of the third stage compensate the capacitance occurs on the deflection plates.

5.2.4 Trigger circuit

The trigger circuit diagram is shown in Fig. 5-7. Trigger signal coupling selector is located at the trigger signal input stage followed by the trigger signal amplifier. At the amplifier output side, the Schmitt circuit is positioned utilizing the ECL.

The vertical trigger signal amplifier for amplifying CH1, CH2, CH3 and NORM trigger signals from the vertical preamplifier and the trigger signal selector is positioned within the vertical amplifier system of ANALOG (1) board.

The output from the trigger signal selector is supplied to the trigger signal coupling circuit via the coaxial cable.

5.2.4.1 Vertical trigger signal amplifier

The trigger signal is obtained from either one of hybrid ICs which are located in CH1, CH2 or CH3 or the delay line driver. The CH1, CH2 and CH3 vertical trigger pick-off amplifiers are identical circuits. CH1 and CH2 including channel switching circuit are all integrated in hybrid IC U411. The hybrid IC U412 includes the CH3, the same amplifier as that of CH1, and the diode gate at the output stage. The amplifier for NORM triggering and its diode gate are integrated in hybrid IC U403.

Fig. 5-7 is the block diagram summarizing the above.

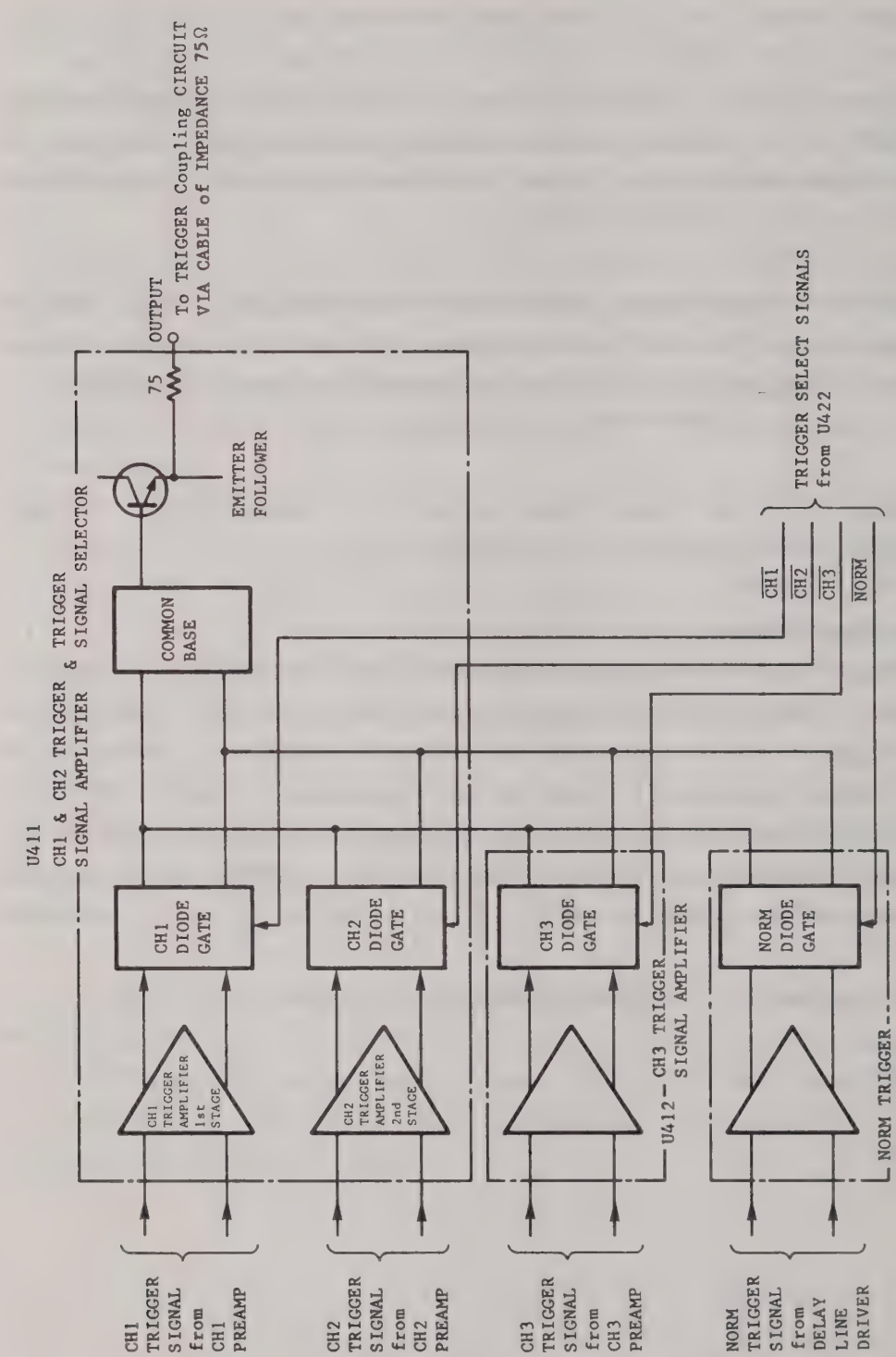

Fig. 5-7 Schematic Block diagram of Vertical Trigger Amplifier

5.2.4.2 Diode gate for trigger signal

The trigger signal amplified in the first stage is supplied to the diode gate. The diode gate passes the trigger signal selected with the trigger source key on the front panel. The relationship between the source key and the diode gate is as described in Table 5-5.

Table 5-5 Trigger source and diode gate

	U411				
Trigger source	CH1 DIODE GATE	CH2 DIODE GATE	CH3 DIODE GATE	NORM DIODE GATE	OUTPUT
NORM	OFF	OFF	OFF	ON	NORM TRIGGER SIGNAL
CH1	ON	OFF	OFF	OFF	CH1 TRIGGER SIGNAL
CH2	OFF	ON	OFF	OFF	CH2 TRIGGER SIGNAL
CH3	OFF	OFF	ON	OFF	CH3 TRIGGER SIGNAL

5.2.4.3 A and B trigger circuits

The trigger signal, after passing through the diode gate, is impedance converted in the emitter follower on the output side and then supplied to the trigger circuit.

The next stage is the trigger signal coupling selector which consists of PNP emitter follower, hybrid IC U601, U701, TV synchronization signal amplifier and analog switch. Trigger circuits for A and B sweeps are similar in their compositions except the FIX circuit and TV coupling. The following describes the B trigger circuit.

The trigger signal is amplified to 100 mV/div deflection on the screen in the emitter follower stage. Hybrid IC U601 is the diode bridge gate and when the trigger coupling switch setting is AC or DC, the trigger signal is supplied to C602. When the trigger coupling switch is set to DC-LF, TV(V), or DC, the trigger signal is supplied to analog switch U606. (See Fig. 5-8.)

The A TRIGGER LEVEL adjustment installed on the C602 negative terminal which is adjusted so that the AC trigger level will be the same as that of the DC coupling.

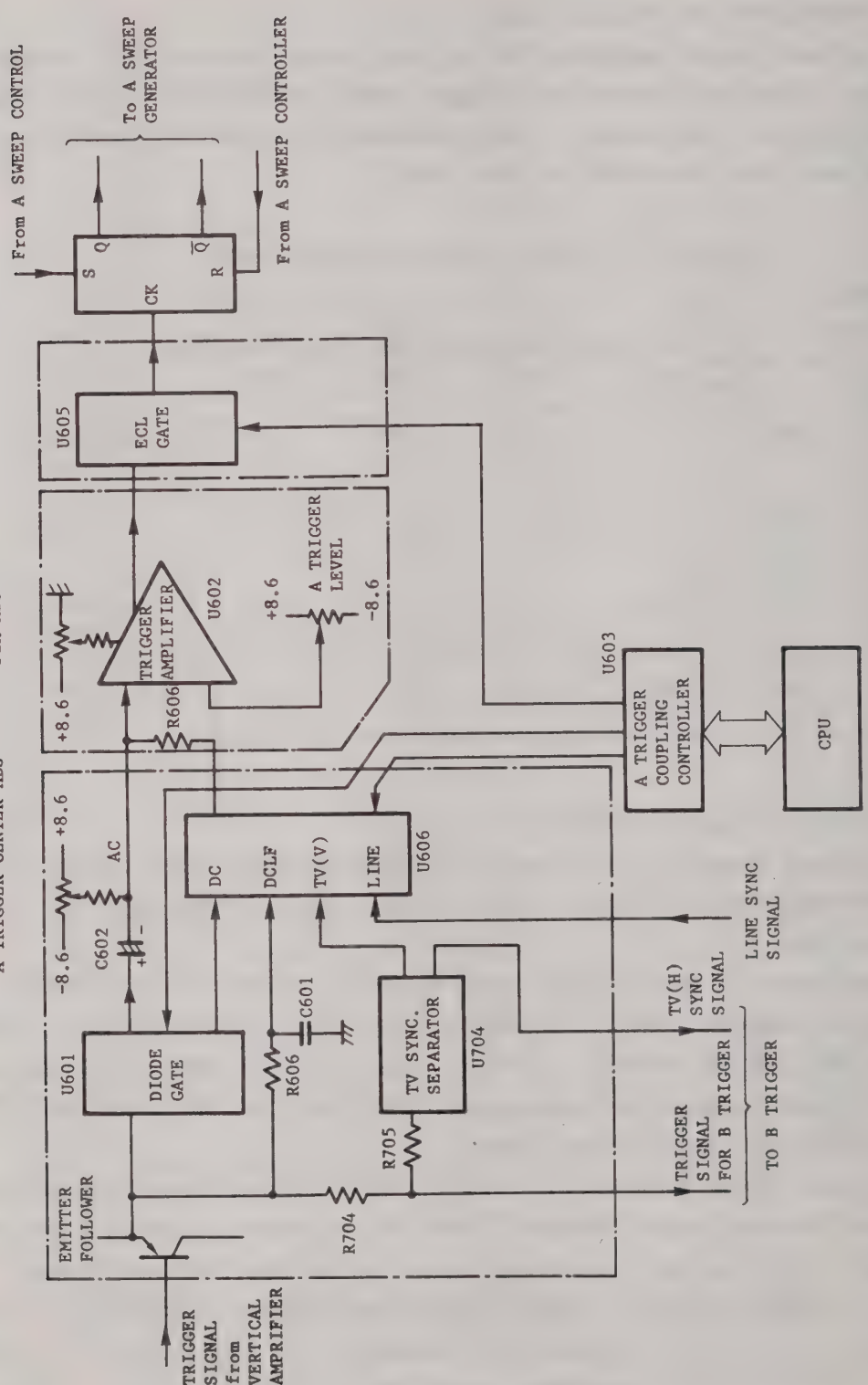

Fig. 5-8 Schematic Block diagram of TRIGGER CIRCUIT

Analog switch U606 controls the trigger signal coupling. When the COUPLING selector on the front panel is set to DC-LF, the low-pass filter consisting of R606 and C601 is connected between the emitter follower and U606. The cutoff frequency of the filter is approximately 50 kHz. When the TV(V) is selected, the TV sync signal amplifier U704 is connected and only the vertical sync signal in the TV signal is picked off.

TV sync signal amplifier U704 also supplies the TV horizontal sync signal to the B trigger circuit.

When the LINE of the SOURCE selector is selected, the mains power line frequency is fed as the trigger signal.

The above trigger signals are fed to the trigger signal amplifier via R608. U601 and U606 are controlled with U603 that receives control signals from the microprocessor according to the setting of the front panel controls.

5.2.4.4 Trigger signal amplifier

The trigger signal amplifier mainly consists of hybrid IC U602. U602 amplifies the input to the level required for the next stage, ECL gate, to rectify the waveform. U602 also determines the level of triggering point according to the trigger LEVEL control setting.

ECL gate U605 provides the trigger pulse when the amplified trigger signal just exceeds the threshold level determined with the trigger LEVEL control. The trigger signal may have various waveforms. They are shaped to form a square-wave with approximately 1 V amplitude.

The trigger pulse thus produced from the trigger signal is supplied to the ECL gate, dynamic flip-flop U643. Pin 15, the U643 output, remains High during one cycle of the A sweep initiated with the leading edge of the first trigger pulse. The reset signal is output after completion of the A sweep and during the specified holdoff time. Then, ECL gate U643 waits for the next trigger pulse.

5.2.4.5 Trigger slope

The microprocessor reads the front panel setting of the SLOPE key, which is transmitted to U603 and the trigger slope is determined by U605. When the slope setting is positive (+), the trigger pulse is output at the positive-going slope of the trigger signal and the negative-going slope when the setting is negative (-).

5.2.5 Sweep circuit

The sweep circuit consists of hybrid ICs of A and B sweep generators, the delay time position circuit and the timing circuit. These circuits are all controlled with the information from the microprocessor. U710 is the port controlling the trigger mode and X-Y operation. U641 controls the horizontal auto operation and A/B gate circuits, U642 is for the A sweep generator and U742 is for the B sweep generator and delay time position circuit. U803 and U810 control set the sweep time factor. U648 and U649 are the ports specifying the code for the D/A converter generating the reference voltage to determine the delay time position. U648 and U649 also output the control command to determine the sweep mode.

5.2.5.1 A sweep generator

U643A is the A sweep gate circuit. Fig. 5-9 shows the operation timing in the triggered condition. The trigger pulse with rectified wave-form output to U643A-11 inverts the D flip-flop U643-15 as shown with arrow marked pulse positive-going portion in Fig. 5-9. The terminal R of D flip-flop U643A-13 is reset after specified holdoff time. The inverted output is shown as the waveform of U643A-15. U642-20 outputs the sweep ramp signal in the active condition. When the ramp voltage reaches between 5 V and 6 V, U643-13 goes active, the D flip-flop is reset, and the ramp returns to the 0-volt level.

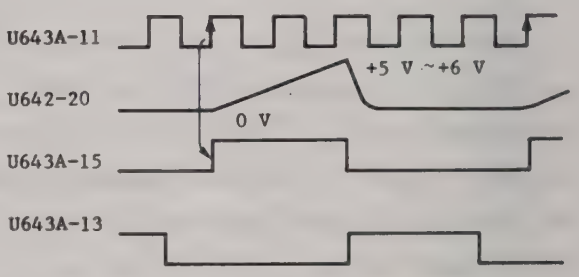

Fig. 5-9 A sweep gate timing

After a specified holdoff time, U643A is again released from the reset state and the sweep signal is activated upon arrival of the next trigger pulse. In this way, the sweep signal is repeatedly generated.

The trigger mode is determined with status of A, B and C logic signals of either 0 V or +5 V supplied to pins 7, 8, and 9 of the A sweep port U642. Table 5-6 shows the control signal combinations determining the trigger mode.

Table 5-6 Trigger control signal combination

TRIGGER MODE	A	B	C	E
AUTO	1	0	1	1
NORM	0	0	1	1
SINGLE	0	1	0	1
X-Y	0	0	0	0

In the auto trigger mode, the freerun sweep begins when a trigger pulse is not supplied to U643A-11 for more than 20 ms. The freerun sweep returns to the ordinary triggered sweep upon receipt of a trigger pulse.

In the NORM trigger mode, the triggered sweep is repeated only when the trigger pulse is supplied to pin 11 of U643A. In the SINGLE mode, one triggered sweep is generated when the SINGLE key is pressed. When the SINGLE key is pressed again, a sweep appears upon arrival of the next trigger pulse.

5.2.5.2 B sweep generator

U643B is the B sweep gate. The B sweep operation is triggered with the A sweep signal generated at pin 20 of A sweep port U642. The A sweep signal is supplied to pin 7 of U742 and its level is compared with the delay time reference voltage (pin 1 of U742) determining the delay time. The reference voltage is output in 1/1000 steps between 0 V and 5 V with a binary, 10-bit code from U648 and U649 (L,M - T,U).

The freerun or B trigger mode may be selected as the B sweep operation with the logic signal supplied to pin 12 of B sweep port U742. When the pin 12 of B sweep port U742 is +5 V, the freerun sweep is applied. Pin 5 of U643 becomes +5 V at the intersection A shown in Fig. 5-10, the inter-section of the A sweep signal and the delay time reference voltage, the D flip-flop

inverts, and the B sweep begins. When pin 12 of B sweep port U742 is 0 V, the B trigger mode is applied, the reset signal of U643B pin 4 is released (the level is reduced from +5 V to +3.5 V) at the point A in Fig. 5-10, the D flip-flop inverts, and the B sweep trigger signal causes the B sweep signal.

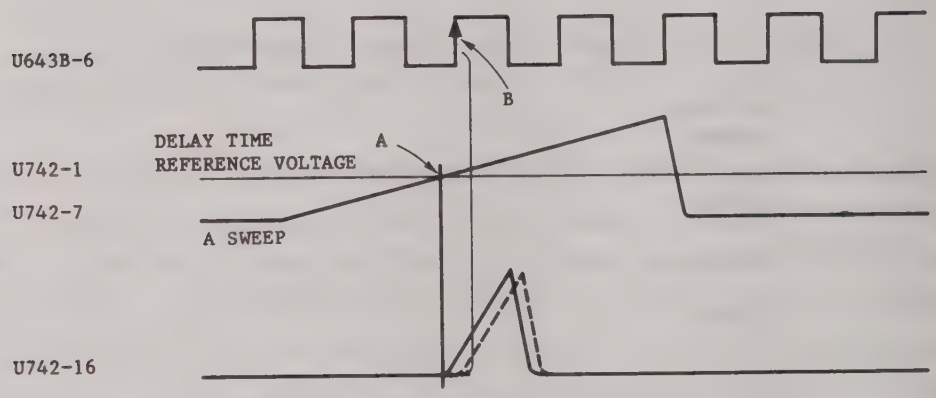

Fig. 5-10 B sweep timing chart

5.2.5.3 Timing circuit for A and B sweep

The timing circuit sets the A and B sweep time and consists of the constant current circuit and the timing capacitor selector. Sweep time data of A and B sweep output from the microprocessor are latched at U803 and U810, respectively. Data are decoded to the constant current data and timing capacitor selection code by decoders U804A, U804B, U806, U811A, U812 and U811B.

In the A sweep timing circuit, analog switch U801 selectively supplies the voltage between 0 V and 5.5 V (0 V when the A sweep time is set to CAL) to U801 pins 2, 7 and 5 (selectively connected) and pins 16, 17 and 15 of timing generator U802. The input voltage functions to continuously vary the set sweep time. In addition to the above input, the constant current produced by the logic signals supplied to pins 12, 13, 14 and 15 of U802 is supplied to pins 1 and 2, then to pin 19 of A sweep port U642.

The logic signals output from pins 12, 11 and 10 of U806 are used to switch the timing capacitor C_T by means of timing switch U807. Further, the same signal is used to switch the holdoff capacitors C807, C808 and C809. The other terminal of each capacitor is commonly connected with pin 4 of A sweep port U642 and holdoff terminal R13. With these arrangements, the A sweep circuit generates the ramp signal calibrated with the constant current source and the timing capacitor.

The design of B sweep timing circuit is the same as that of A sweep timing circuit except analog switch U801 of the A sweep is replaced with transistor switches Q803 through Q805 and no holdoff capacitor is installed. Table 5-7 shows the logic code for each sweep time.

Table 5-7 Logic code selecting A/B sweep time

Item / Sweep Time	A sweep												B sweep										
	U804A			U804B				U806			C_T	C_H	U811A			U812				U811B			C_T
	Q1	Q2	Q3	Q1	Q2	Q3	Q4	Q1	Q2	Q3			Q1	Q2	Q3	Q1	Q2	Q3	Q4	Q1	Q2	Q3	
0.5 s/DIV	1	0	1	1	1	1	0	0	0	1	C805	C809											
0.2 s/DIV	0	1	1	1	1	1	0	0	0	1													
0.1 s/DIV	1	1	0	1	1	0	1	0	0	1													
50 ms/DIV	1	0	1	1	1	0	1	0	0	1			0	1	0	1	1	0	1	0	0	1	C815
20 ms/DIV	0	1	1	1	1	0	1	0	0	1			1	0	0	1	1	0	1	0	0	1	
10 ms/DIV	1	1	0	1	0	1	1	0	0	1			0	0	1	1	0	1	1	0	0	1	
5 ms/DIV	1	0	1	1	0	1	1	0	0	1			0	1	0	1	0	1	1	0	0	1	
2 ms/DIV	0	1	1	1	0	1	1	0	0	1			1	0	0	1	0	1	1	0	0	1	
1 ms/DIV	1	1	0	0	1	1	1	0	0	1			0	0	1	0	1	1	1	0	0	1	
0.5 ms/DIV	1	0	1	0	1	1	1	0	0	1			0	1	0	0	1	1	1	0	0	1	
0.2 ms/DIV	0	1	1	0	1	1	1	0	0	1			1	0	0	0	1	1	1	0	0	1	
0.1 ms/DIV	1	1	0	1	1	0	1	0	1	0	C804	C808	0	0	1	1	1	0	1	0	1	0	C813
50 µs/DIV	1	0	1	1	1	0	1	0	1	0			0	1	0	1	1	0	1	0	1	0	
20 µs/DIV	0	1	1	1	1	0	1	0	1	0			1	0	0	1	1	0	1	0	1	0	
10 µs/DIV	1	1	0	1	0	1	1	0	1	0			0	0	1	1	0	1	1	0	1	0	
5 µs/DIV	1	0	1	1	0	1	1	0	1	0			0	1	0	1	0	1	1	0	1	0	
2 µs/DIV	0	1	1	1	0	1	1	0	1	0			1	0	0	1	0	1	1	0	1	0	
1 µs/DIV	1	1	0	0	1	1	1	0	1	0			0	0	1	0	1	1	1	0	1	0	
0.5 µs/DIV	1	0	1	0	1	1	1	0	1	0			0	1	0	0	1	1	1	0	1	0	
0.2 µs/DIV	0	1	1	0	1	1	1	0	1	0			1	0	0	0	1	1	1	0	1	0	
0.1 µs/DIV	1	1	0	0	1	1	1	1	0	0	C802	C807	0	0	1	0	1	1	1	1	0	0	C811
50 ns/DIV	1	0	1	0	1	1	1	1	0	0			0	1	0	0	1	1	1	1	0	0	

0: 0 V
1: +5 V

5.2.5.4 A sweep

The A gate signal (active "H") is output from the A sweep circuit during the A sweep operation. The character signal generated from the character generator is supplied to pin 6 of the Z-axis driver illustrated in Fig. 5.9. The A gate signal is supplied to pin 13 of the Z-axis driver. The mixed signal of the character and A gate signals is output from pin 5 toward U1003.

5.2.5.5 ALT sweep

In the alternate sweep mode, the character signal operation is the same as that of A sweep described above. The A gate signal and the B gate signal (active "H") are both output. The mixed signal of these three are output from pin 5 of the Z-axis driver toward U1003.

The intensity of the B sweep trace against the A sweep one is automatically controlled by the microprocessor, which information is supplied to pin 1 of the Z-axis driver.

5.2.5.6 B sweep gate

The character signal operation is the same as that of A sweep. In the B sweep mode, although the A gate signal is being generated, the signal is blocked in U1002 since the A sweep is not displayed during the B sweep operation. The B gate signal is output from pin 5 of the Z-axis driver toward U1003.

5.2.6 Z axis circuit

The Z axis circuit controls the display intensity. To drive the Z axis circuit, signals from the sweep and chop blanking circuits are required. These signals are logic signals that are output from chop blanking circuits in the V MODE circuit according to A sweep, B sweep and horizontal mode settings. The output from the Z axis driver is supplied to the Z axis amplifier for controlling the display intensity.

5.2.6.1 Z axis driver

Z axis driver U1002 is a hybrid IC including logic integrated circuits. It receives signals from the sweep and chop blanking circuits, mix them, and output the mixed signal to the succeeding stage, Z axis amplifier U1003. Input to U1002 is the logic signal and its output is the current signal.

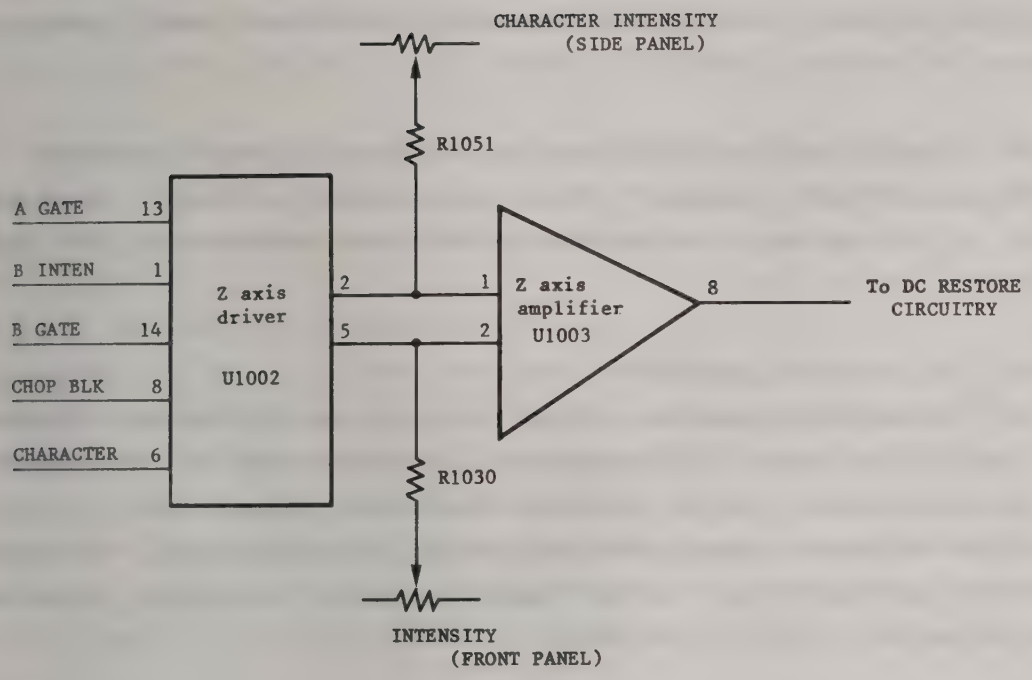

Fig. 5-11 Schematic block diagram of Z axis circuit

5.2.6.2 Z axis amplifier

Hybrid IC U1003 is the Z axis amplifier. The amplifier transforms the current signal supplied from Z axis driver U1002 to the voltage signal as well as amplifying the input signal. The current signal is supplied to pin 2 and the character signal is supplied to pin 1. The INTENSITY control under the screen on the front panel and the CHARACTER INTENSITY control on the side panel are connected with these terminals for the respective display intensity control.

5.2.6.3 X-Y amplifier

The X-signal for the X-Y operation is obtained from the CH1 trigger signal output of the CH1 vertical preamplifier. The signal is converted from the voltage signal to current one in hybrid IC U415 and then supplied to one of inputs of horizontal preamplifier U901.

5.2.7 Horizontal amplifier

Fig. 5-12 shows the block diagram of the horizontal amplifier. The horizontal amplifier receives the ramp signal from A and B sweep generators to drive CRT horizontal deflection plates.

The signal to be supplied to the horizontal amplifier is determined by the horizontal mode setting. The signal supplied to the CRT horizontal plates is the ramp described above or the signal supplied to the CH1 input connector in the X-Y mode.

5.2.7.1 Horizontal preamplifier

The horizontal preamplifier is made up with hybrid IC U901 and converts the signal-ended input current signal to the differential current signal. The converted signal is output to the horizontal output amplifier.

In the horizontal preamplifier U901, input signal switching, horizontal position, gain switching for x10 magnification and horizontal character signal superpose circuits are located.

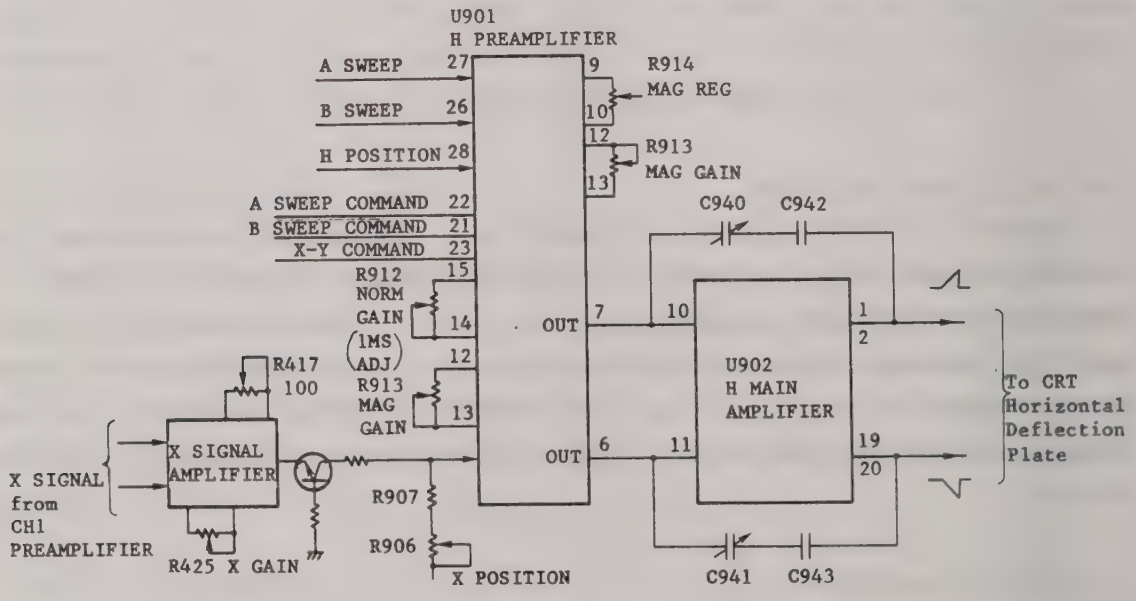

Fig. 5-12 Schematic block diagram of horizontal amplifier

The character signal superpose circuit consists of the diode gate and switching circuits for superposing the horizontal character signal on the ramp signal which is required for digital display of vertical, horizontal and delay coefficients on the screen.

Horizontal character signals are single-ended voltage signals and the character signal superpose circuit transform them to differential current ones before superposing them on the ramp signal.

5.2.7.2 Horizontal main amplifier

Hybrid IC U902 is the horizontal main amplifier, which is the feedback amplifier transforming the differential current input signal to the differential voltage signal for driving the CRT horizontal plates. The positive ramp current signal is generated at the output pin 7 of the horizontal preamplifier and the negative ramp current signal is produced at the output pin 6 (the character superpose signal is superposed on the ramp). These ramps are supplied to input pins 10 and 11 of the horizontal main amplifier.

The signals are transformed to voltage signals, amplified, and supplied to output pins 1 and 2, and 19 and 20 of the horizontal main amplifier.

Serial capacitors C940 and C942 connected in parallel with pins 10 and 1/2, and capacitors C941 and C943 connected in parallel with pins 11 and 19/20 forms the compensation circuits for the 5 ns/div sweep.

5.2.8 AUTO RANGE circuit

One of the features of the VP-5610P is the auto range function. In the auto range mode, the amplitude and cycle of input signal are detected and a proper range of the vertical deflection and A sweep time coefficient are automatically set according to the input conditions. Thus, the desired trace display can automatically obtained without the need for switch settings.

The amplitude and cycle of the display may be preset with AUTO RANGE VERTICAL and HORIZONTAL, grey and orange switches on the side panel. Note that the preset amplitude and cycle are the reference and the display will not be exactly the preset values, but near the specified values.

The amplitude level may be preset in 3 stages and the cycle, 9 stages. The auto ranging of amplitude and cycle is controlled in the vertical and horizontal auto range circuits, respectively, which are under the control of the microprocessor.

5.2.8.1 Vertical auto range circuit

Vertical auto range circuits are provided both for CH1 and CH2. The designs and operations of two circuits are identical except the numbering of components. In this Section, only CH1 will be described. Fig. 5-13 shows the block diagram of vertical auto range circuit.

The vertical auto range circuit consists of U121 and U122 (U221 and U222 for CH2). In the U121, the signal amplifier, peak detector and comparator are integrated. Operations of U121 are as described below:

The CH1 trigger signal output from pins 10 and 11 of vertical preamplifier U102 is supplied to input pins 20 and 19 of U121 as the input signal via R432 and R433. The input signal is further amplified in U121 and is output to peak detector, where the peak value of that signal is detected. The detected peak value is compared with the voltage set with the AUTO RANGE VERT switch on the side panel. The comparison of two voltages is conducted by the comparator.

The output from the comparator is the logic level signal and is supplied to U122. In the U122, digital ICs including counter register and logic gate are integrated having operations described below.

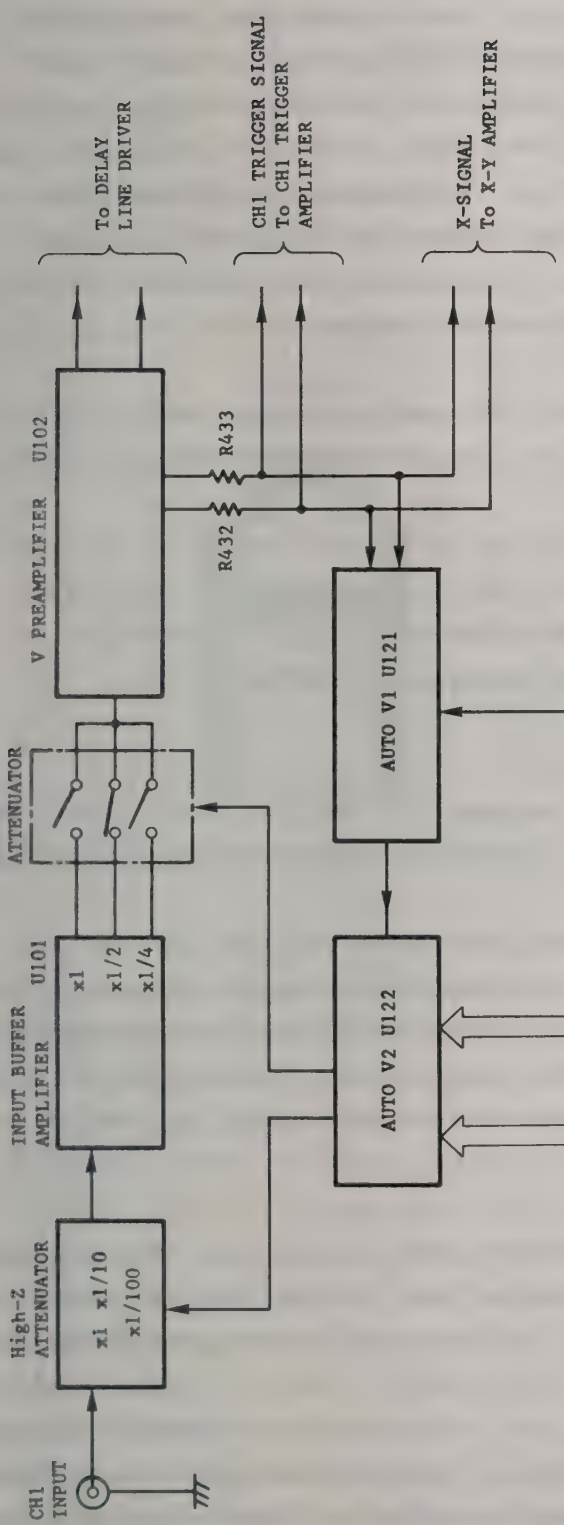

Fig. 5-13 Schematic Block diagram of Vertical Auto range

When the auto ranging is turned on, the microprocessor execute the auto range initial setting. The counter in U122 outputs the logic signal for switching the signal path between high-Z and low-Z attenuators according to the microprocessor instruction. The logic signal to drive the high-Z attenuator is supplied from pins 17 and 18 to transistors Q62 and Q63. The logic signal for the low-Z attenuator is supplied from pins 14, 15 and 16 to transistors Q101, Q102 and Q103. The vertical deflection coefficient is determined by the relay driven with the logic signal.

U102 pins 10 and 11 output a newly set amplitude signal modified from the input signal, the one cycle of the auto ranging operation ends and the system returns to the original status.

The microprocessor reads out the deflection coefficient data in the U122 register and judges if the data is valid. If the result is satisfactory, the set vertical deflection coefficient is displayed on the screen and the vertical auto ranging operation is complete.

5.2.8.2 Horizontal auto range circuit

Hybrid IC U641 is the major component of the horizontal auto range circuit in which the counter, analog switch and comparator are integrated.

The trigger pulses from ECL gate U605 arrive the U641 pins 26 and 27. The positive pulse is supplied to pin 26 while the negative pulse is received by pin 27. These trigger pulses are counted with the built-in counter. The output from the AUTO RANGE HORIZONTAL switch circuit on the side panel which is a binary positive logic signal also arrives the counter pins 20, 21, 22 and 23.

Based on the AUTO RANGE HORIZONTAL switch setting, the trigger pulse is counted and the logic signal output is sent to the microprocessor from pin 17. The microprocessor detects a A sweep time matching conditions of the supplied logic signal.

When the satisfactory A sweep time is determined as described above, a logic signal of Lo is output from pin 5, the horizontal auto ranging operation is complete and the A sweep time value is displayed on the screen.

Pins 7, 8, 9 and 19 of U641 are used for microprocessor controls. Pin 10 outputs the A gate signal.

5.2.9 Character generator

The VP-5610P screen displays characters on each of the upper and lower two rows. Each character is made up of vertical 10 dots (Y axis) and horizontal 8 dots (X axis) as shown in Fig. 5-14 and the X-Y vector scanning is used for the character display.

Each dot of characters is stored as 8-bit data in character ROM U1504 with the character data format shown in Fig. 5-15. The detail circuit descriptions follow according to schematic block diagram shown in Fig. 5-16.

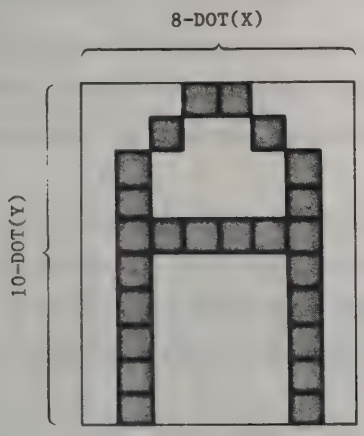

Fig. 5-14 Character dot composition

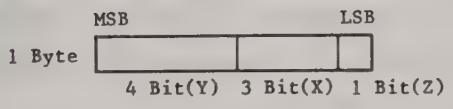

Fig. 5-15 Character data format
(MSB: Most significant bit)
(LSB: Least significant bit)

The specified starting address code of character data is informed from character address RAM U1503 to character address ROM U1504 character ROM U1504 A5 through A10. Dot counter U517 counts up starting from 0 and the data is sent to U1504 A0 to A4 and outputs X, Y, and Z dot data of each dot from U1504 to the X- and Y-axis register array or to Z axis.

X- and Y-axis register array and operational amplifiers U1507 and 1509 form the D/A converter, which transforms the character data to voltage signals. The transformed X and Y signals are supplied to vertical main and horizontal preamplifier, respectively. The switching of character dot and waveform display signals is done with the CHARACTER and CHARACTER signals supplied to the Z axis.

When loading one character is complete, the dot counter is reset and character counters U512 and U511 begin counting. Character counters are the 22-notation counter and they count 22-character data. The counted, 5-bit data are sent to X axis register array R1512.

Horizontal 22-column character positions are specified with the data signal. Thus, characters are specified horizontally in order and, when one train is complete, character counter outputs the carry signal and activates the quadruple counter. U1511 counted data is sent to Y axis register array in binary notation specifying the upper and lower 2-row character positions.

The dot generator outputs the dot pulse of approximately 2.5 µs per one dot and sends the information every 25 µs to the dot counter. In this way, a 25 µs waveform display follows after a character display minimizing the adverse influence over the waveform display by superposing the character one.

The circuit controller functions so that corresponding circuits would produce characters required for a display page once approximately every 20 ms and fetch the data every time the microprocessor sends the character data. Data acquisition has the highest priority.

Output data from character counters U512 and U511 sequentially specify the addresses in the character address RAM via the U513 bi-directional, 3-state bus driver. That is, these counters sequentially send the starting addresses of character ROM U1504 storing character data starting from the upper, first row.

As character data from the microprocessor, character location data and character data are sequentially transmitted to character location data latch U1516 and character data latch U1515. The character location data specifies the address of character address RAM and loads the character data stored in character data latch U1515 (the starting address of the specified character).

When the above data transmission is complete, the circuit counter switches the signal path to the character display operation.

Transistor Q1505 stops the character display on the screen when a +5 V (Hi) logic signal is supplied to R1559.

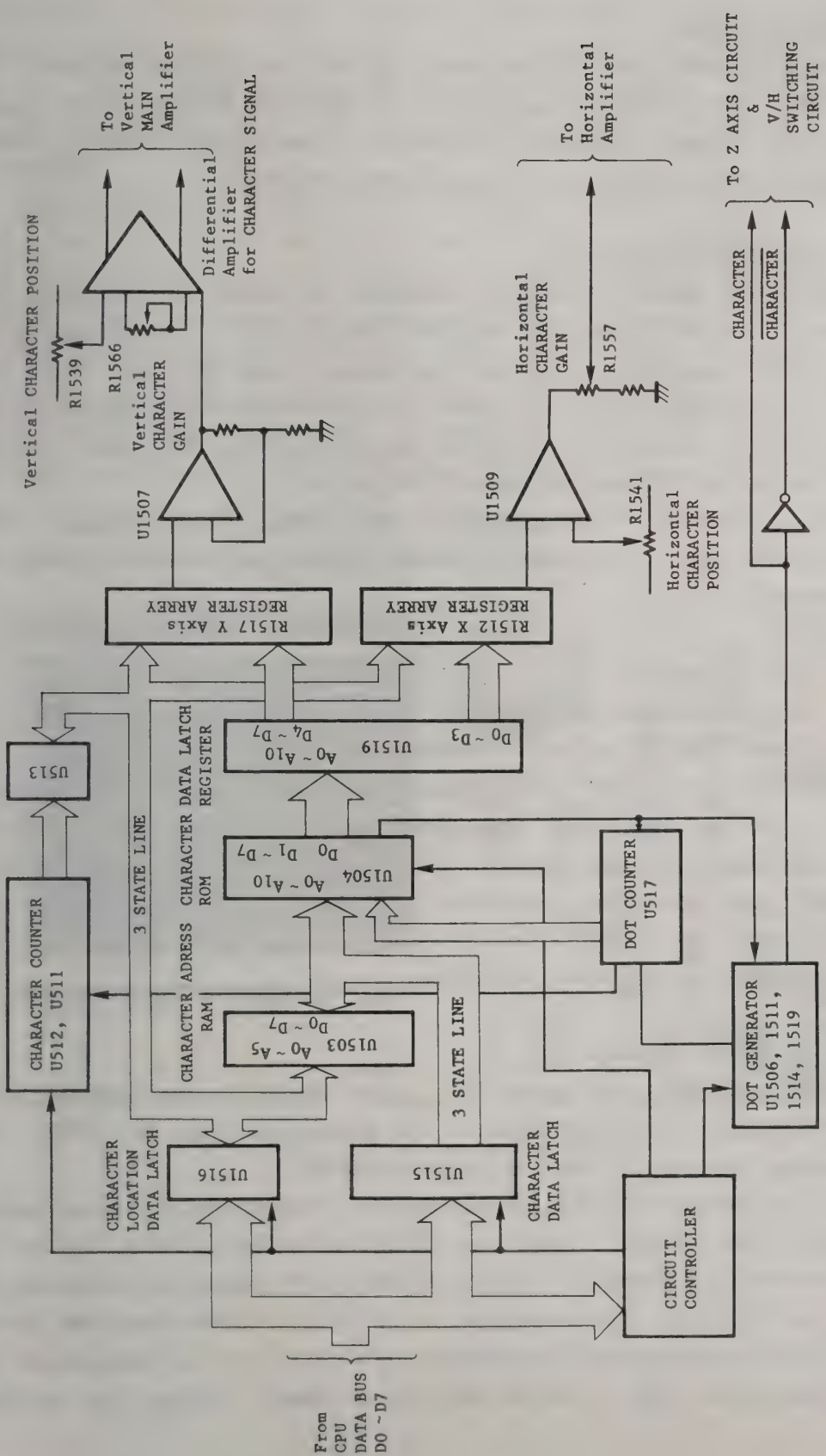

Fig. 5-16 Schematic diagram of CHARACTER GENERATOR

5.2.10 Microprocessor

The microprocessor and its peripheral digital circuits are the heart of the VP-5610P. The software program stored in U1416 detects the front panel operation and transmits necessary information to respective blocks. These circuits are on the printed circuit board named CPU board.

5.2.10.1 Microprocessor circuit

Microprocessor U1414 is the major component for control of functions. It has an 8-bit, bi-directional data bus (AD0 through AD7). Its address bus is 16 bits (A0 through A15). The data bus commonly uses the lower byte (A0 through A7) of address bus. The lower byte of address bus outputs both the data and address signals with the time sharing system. The time sharing signal is called the ALE and is output from pin 30.

Crystal oscillator Y1408 generates the 5-MHz, clock signal. The oscillated 5-MHz clock is divided to 2.5-MHz clock signal with the divider in microprocessor U1414.

5.2.10.2 Power on sequence

When the power supply is turned on, the RC serial circuit consists of R1404 and C1407 begins charging. Because of the time constant of the RC serial circuit, pin 36 (RESET IN) of U1414 is maintained Lo for approximately 200 msec. During that period, the power supply voltage and other circuit transient are completed and return to the normal conditions. Pin 36 then continuously goes toward Hi. When the voltage of pin 36 exceeds the upper threshold level, the RESET state of micro-processor is released and the microprocessor begins the power on routine.

5.2.10.3 Power down sequence

When the power supply is turned off, C1407 charged to approximately +5 V rapidly discharges via diode CR1402. The potential of pin 36 (RESET IN) lowers causing temporarily reset the microprocessor.

The +5 V potential of Q1402 emitter produced from the +8.6 V power supply with Zener diode VR1401, transistor Q1402 and resistor R1426 begins to decrease gradually. Finally, battery BT1400 (+3 V) begins to discharge via CR1408. As a result, the voltage at pin 18 (CS) of operational RAM U1416 pulled up with resistor R1417 decreases from +5 V to +3 V and maintained at +3 V. Operational RAM U1416 is the current memory storing the setting

information of front panel switches, which stores the current front panel settings at this time. Since pin 18 (CS) voltage is maintained at +3 V, the current front panel settings are stored in that memory. When the power supply is turned on next time, the operation begins with the data stored in the memory.

The service life of battery BT1400 is approximately three years. When the battery is over its service life or its voltage is decreased, turning on the power supply will erase data stored in memory U1416. Since data to be stored is lost, the power on operation will be at random.

In preparation of such random startup due to faulty battery or other reasons, the built-in software supports the initialization. Turning the power supply on simultaneously pressing CH1 and CH2 GND keys starts the software causing the initial settings--keys shown in Fig. 5-17 illuminate.

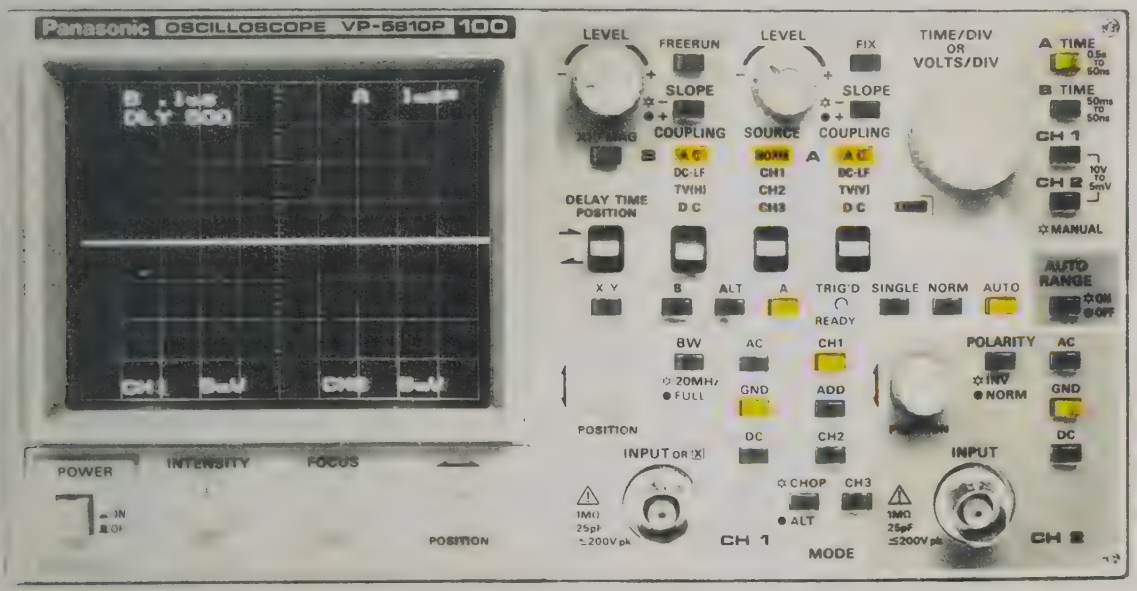

Fig. 5-17 Initial setting

5.2.10.4 Microprocessor and I/O ports

The microprocessor has output ports to transmit the front panel operations to respective blocks and input ports for microprocessor to receive information from each block. These I/O ports are positioned near the block to be controlled. Some ports are even integrated in a hybrid IC together with the block circuit.

Output ports are classified to the port receiving serial data and outputting parallel data and one receiving and outputting parallel data. The classification can also be applied to the input ports--serial/parallel and parallel/parallel data combinations.

Special addresses are given to I/O ports so that the microprocessor may access them as needed.

5.2.10.5 Output port with serial input data and parallel output

Serial data are supplied from microprocessor data bus DO. As parallel output of the port is 8 bits, eight serial data of Hi or Lo units are required. Serial data are loaded with the clock pulse assigned to each port. The clock pulse is output from U1416 pins 1 to 17 (YO to Y15) or U1421 pins 8 to 15 (Y7 to YO) to each port.

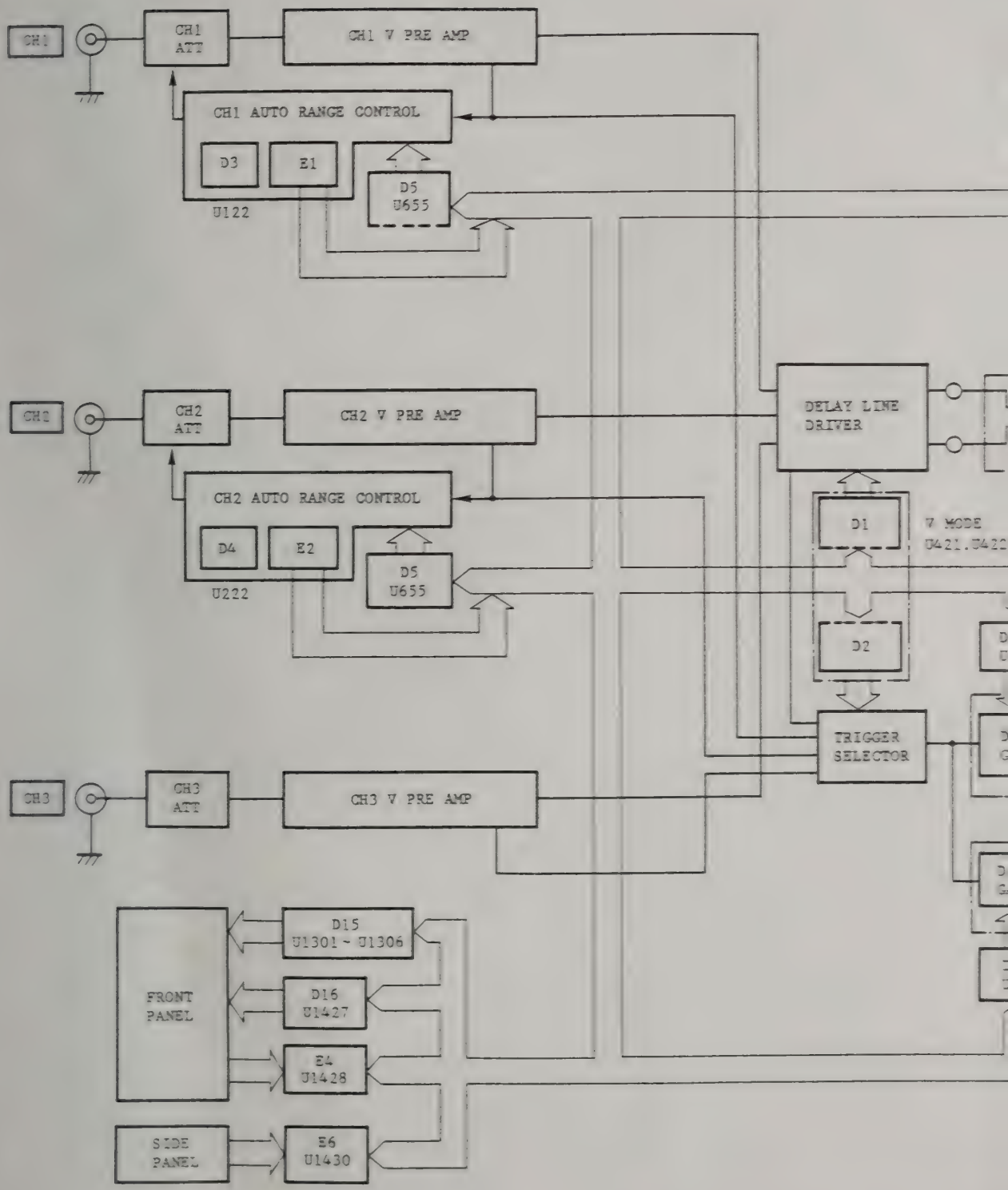

Fig. 5-18 Schematic Block diagra

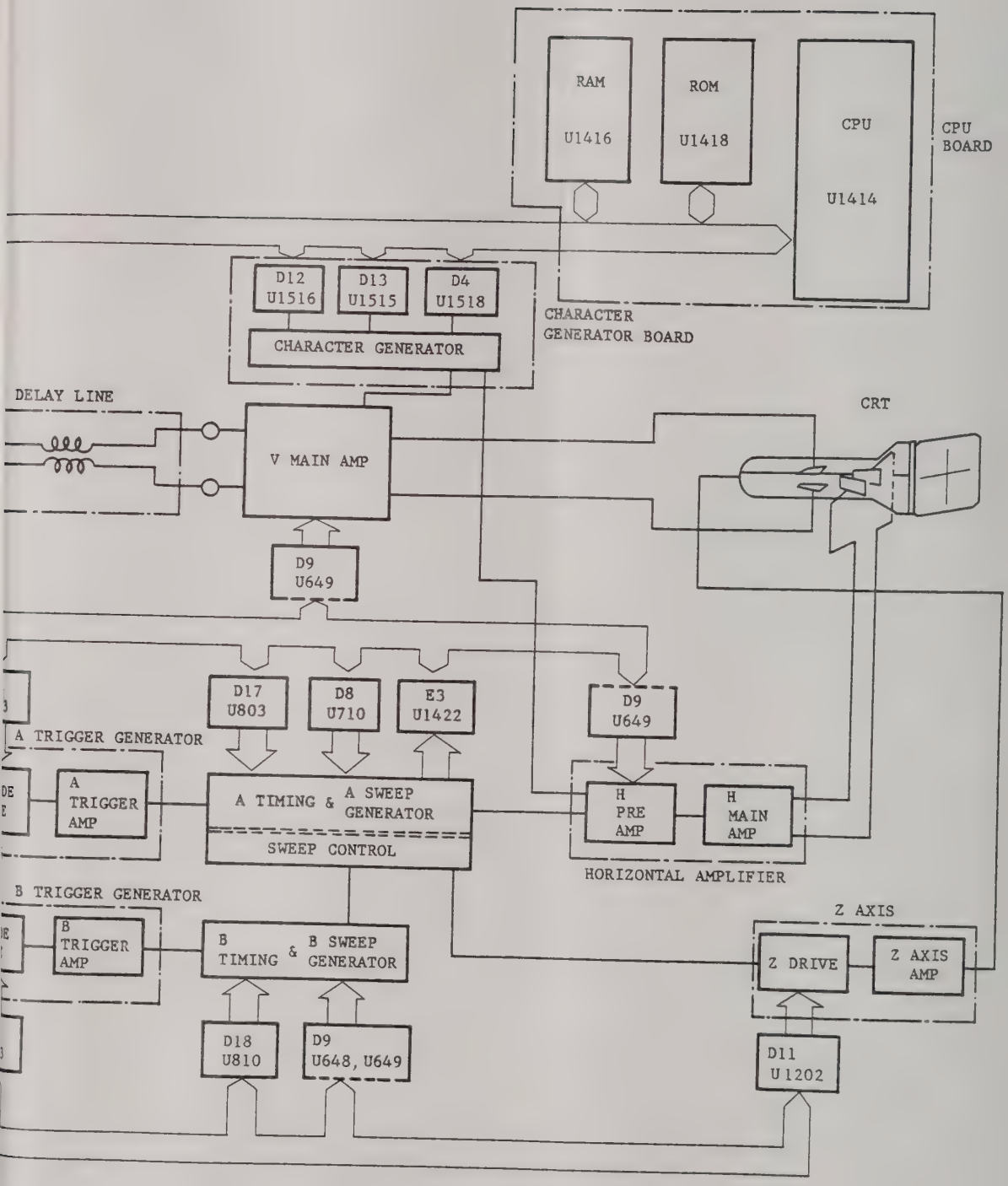

f CPU Controlled Circuitry

5.2.10.6 Output port with parallel input and output data

The parallel port of which microprocessor data bus pins D0 to D7 or part of them are connected in parallel with the input side loads data with the clock pulse assigned to that port. This type of port output data simultaneously with the data receipt.

5.2.10.7 Input port with parallel input data and serial output

Input ports are mainly used to transmit information of each block to the microprocessor. Parallel data input are transformed to serial data with the clock pulse assigned to that port and supplied to the microprocessor data bus.

5.2.10.8 Input port with parallel input and output data

Data input in parallel are loaded with the clock pulse assigned to that port. Simultaneously, data are output to microprocessor data bus D0 through D7.

I/O ports described above are all summarized in Tables 5-8 and 5-9.

Table 5-8 Input port list

	Port name	Code	Address	Location	U No.	Type
1	CH1 ATT RANGE INPUT	E1	8012_H	INTEGRATED IN U122	—	Parallel input to serial out
2	CH2 ATT RANGE INPUT	E2	8013_H	INTEGRATED IN U222	—	"
3	SWEEP DATA INPUT	E3	8014_H	CPU BOARD	U1422	Parallel input to parallel out
4	PANEL DATA INPUT	E4	8015_H	CPU BOARD	U1428	"
5	SIDE PANEL DATA INPUT	E6	8017_H	CPU BOARD	U1430	"

* There is no E5.

Table 5-9 Output port list

	Port name	Code	Address	Location	U No.	Type
1	V MODE	D1	8000_H	INTEGRATED IN U421	—	Serial input to parallel out
2	TRIG PICK OFF	D2	8001_H	INTEGRATED IN U422	—	"
3	CH1 ATT CONTROL	D3	8002_H	INTEGRATED IN U122	—	"
4	CH2 ATT CONTROL	D4	8003_H	INTEGRATED IN U222	—	"
5	V AUTO CONTROL	D5	8004_H	ANALOG -2	U655	"
6	A TRIG COUPLING	D6	8005_H	ANALOG -1	U603	"
7	B TRIG COUPLING	D7	8006_H	ANALOG -1	U703	"
8	SWEEP	D8	8007_H	ANALOG -1	U710	"
9	SWEEP MODE	D9	8008_H	ANALOG -2	U648 U649	"
10	B INTENSITY	D11	$800A_H$	ANALOG -2	U1202	"
11	CHARACTER LOCATION	D12	$800B_H$	CHARACTER	U1516	Parallel input to parallel out
12	CHARACTER DATA	D13	$800C_H$	CHARACTER	U1515	"
13	CHARACTER MODE	D14	$800D_H$	CHARACTER	U1518	Serial input to parallel out
14	PANEL LED	D15	$800E_H$	PANEL -2	U1301 ~U1306	"
15	PANEL SCAN	D16	$800F_H$	CPU BOARD	U1427	Parallel input to parallel out
16	A TIMING	D17	8010_H	ANALOG -1	U803	Serial input to parallel out
17	B TIMING	D18	8011_H	ANALOG -1	U810	"

* There is no D10.

5.2.11 Front panel control circuit

The front panel functions as if it were the interface between the oscilloscope and the operator. All key switches are not directly connected with functional circuits so that they will not give adverse influence to circuit operations.

However, CH1 POSITION, CH2 POSITION, A TRIGGER LEVEL and B TRIGGER LEVEL controls are directly connected with circuits and are not controlled with the microprocessor. This is also the same for INTENSITY, FOCUS and H POSITION controls.

5.2.11.1 Key switches

Key switches with LEDs on the front panel are connected with the 5-row-by-8-column matrix. Lines forming the matrix are connected with microprocessor output port U1427 and input port U1428, respectively.

The microprocessor outputs the scanning signal (Hi) to U1427 Q0 to Q4. It detects the on/off status of key switches on the front panel by reading data of U1428 D0 to D7. When a key switch is pressed, the Hi level signal output to U1427 arrives the corresponding pin of U1428 turning that pin to Hi via the key switch. The microprocessor detects that Hi level.

5.2.11.2 Key switch LEDs

All key switches have their built-in LEDs. The LEDs display the current operation modes.

Anodes of LEDs are all connected with +5 V line and their cathodes are connected with U1301 through U1306 QA to QH, microprocessor output ports for LED illumination, via 330 Ω resistors. When the micro processor detects that a LED is turned on, the corresponding output port among U1301 through 1306 goes Lo. U1301 through U1306 are serially connected with microprocessor data bus D0.

Since there are 43 LEDs, 43 data are supplied in series to U1301 through U1306. The output ports that LEDs do not light are Hi level.

The turning direction of rotary encoder is detected by monitoring the deviation of pulses generated.

5.2.12 Calibrator voltage generator

Hybrid IC U1201 is the voltage generator for calibrator. U1201 is on the side panel board and generates a 0.3 V, 1 kHz square-wave. The error rate of the square-wave amplitude is within 1%. The accurate output voltage is used for checking the vertical axis error rate and the waveform compensation of the probe.

The 1-kHz square-wave is oscillated with the astable multi-vibrator that consists of polyester capacitor C1201 and C1202 positioned outside the U1201. Resistor R1336 is the fine adjustment for the output voltage amplitude.

5.2.13 CRT circuit

Fig. 5-19 shows the block diagram of the CRT circuit. The CRT circuit consists of the high-voltage circuit, high-voltage oscillator, high-voltage multiplier, high-voltage rectifier, Z axis circuit and CRT controller for driving the CRT.

5.2.13.1 High-voltage oscillator and controller

Operational amplifier U101 and transistor Q1001 drive the transformer T1002 and a high-voltage is generated on the secondary side. The oscillation frequency is determined with the resonance frequency special of transformer T1002 that is approximately 30 kHz.

When the power supply is turned on, capacitor C1003 connected with pin 3 of the operational amplifier begins to charge via R1005 and the HV adjustment. When the operational amplifier terminal voltage increases because of the charged voltage, operational amplifier U1002 acts to maintain the balance and outputs a voltage required for balancing. The output is sent to the base of high-voltage and -capacity transistor Q1001 via R1009 and pins 3 and 4 of T1002. This causes Q1001 to turn on.

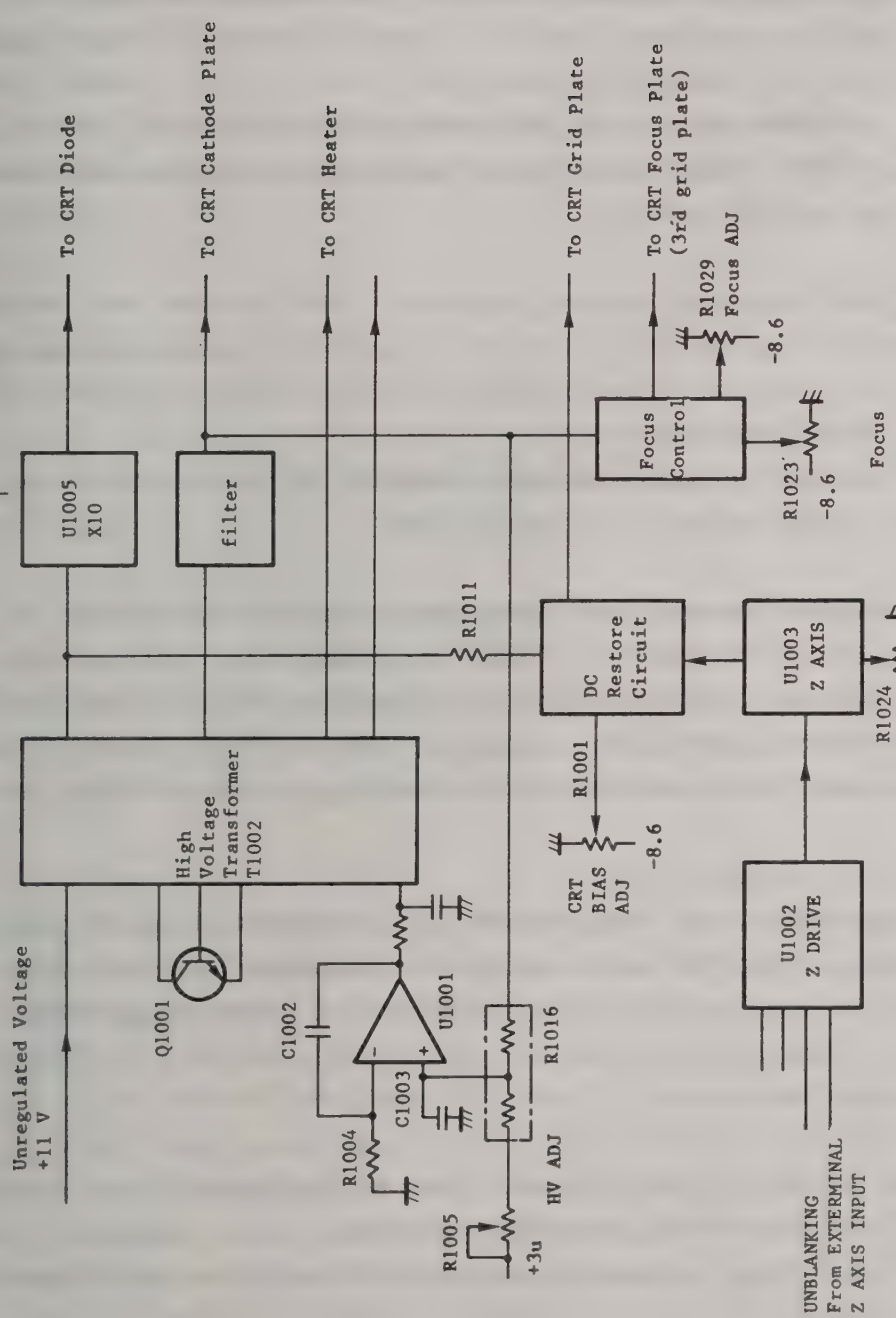

Fig. 5-19 Schematic Block diagram of CRT CIRCUIT

Since the collector current of Q1001 flows T1002 pins 1 and 2, a positive feedback voltage is generated between T1002 pins 3 and 4 causing sufficient driving force against transistor Q101. When the peak current flow between pins 1 and 2 is over after a while, a reverse feedback voltage against the positive one is conducted between pins 3 and 4. As a result, the base current of Q1001 begins to be reduced aiming the rapid cutting off of transistor Q1001. This causes the voltage generated at the secondary side of T1002 to be rapidly reduced.

When Q1001 begins to operate, capacitor C1003 that has been deeply biased (since the voltage applied to the pin is negative) begins charging gradually towards the positive direction with the +30 V current via R1005 until it arrives the original level.

The feedback voltage from high-voltage of -1.5 kV is utilized to control the high-voltage control the original level.

The feedback voltage from high-voltage of -1.5 kV is utilized to control the high-voltage controller. When the power supply is turned on, the feedback current is not existing and capacitor C1003, therefore, begins charging towards the positive direction with the +30 V current via R1005. Thus, the oscillation described in the preceding paragraph begins.

5.2.13.2 High-voltage circuit

The secondary coil of transformer T1002 supplies a 1.5 kV high-voltage for producing the CRT anode voltage and the heater current. The output required for the anode voltage is supplied to high-voltage block U1005, rectified, magnified by 10 and arrives the CRT anode as a 15 kV high-voltage via the anode cap.

The DC restore circuit included in the high-voltage circuit controls the display intensity using the output from the Z axis amplifier. It also produces the voltage required to drive the CRT using the same output.

High-voltage adjustment R1005 controls the high-voltage applied to the CRT cathode so that it will be -1.5 kV. CRT BIAS adjustment R1001 adjusts the bias with the output from the Z axis amplifier so that the display on the screen will be adequate.

FOCUS adjustment R1029 is set so that the display focus will be the sharpest when the FOCUS control on the front panel is positioned at the mid-position. ASTIG adjustment R1021 is for the astigmatism of the display on the screen.

TRACE ROTATION control R1022 on the side panel compensates the inclined trace due to the magnetic field effect. The trace rotation coil is installed on the CRT neck.

5.2.14 Power circuit

The power circuit may be operated with a power supply of 90 VAC through 250 VAC or 90 VDC through 250 VDC due to the switching circuit installed in the power board.

The AC or DC power supplied to the power board passes through the noise filter and rectified with CR1101. If the power supply is DC, the input is transformed to the same polarity as that of the voltage polarity of the rectified AC power supply. The rectified output voltage is flattened with C1105 and C1106 converting to a DC power of 90 VDC to 300 VDC including the ripple.

Resistor R1108 functions to minimize the rush current when switching power supply U1101 is activated. R1108 is shortcircuited with triac CR1107 when the switching operation is stabilized.

U1101 is a external commutated switching IC consists of the approximately 30-kHz square-wave oscillator, rectification circuit, phase controller, switching transistor and drive circuit. The collector of switching transistor is connected with U1101 pin 16 and drives pin 3 of transformer T1101. Its emitter is connected with U1101 pin 14 and the negative pole of the DC power supply via R1117. Pin 2 of transformer T1101 becomes the positive pole of the DC power supply, power supply path is switched with the switching transistor, and supplies power to each coil.

The voltage control is performed with the phase control method using the signal output from the U1101 square-wave oscillator. Pin 5 of U1101 is for the control, which uses the rectified output voltage from coils 4-5-6 output to pin 8 as the sample voltage.

Photocoupler RT1105 extracts the line trigger signal which is transformed to the ramp and sent to the trigger circuit on the ANALOG-1 board. The photocoupler also functions to stop the operation by shortcircuitting pin 7 of U1101 when the power switch is turned on with the disconnected power pack.

The secondary voltages are supplied to all blocks from T1101 secondary coils shown with terminals 7-9, 10-12 and 22(A)-21(B) shown in Fig. 5-20. Each power supply is stabilized with the switching regulator for voltage deviation of approximately ±2% and flattened with the filter eliminating the switching noise. The +30 V, +8.6 V and -8.6 V power supplies are stabilized for voltage deviation approximately ±1% with regulators. These power supplies generated at the transformer secondary side are supplied to all blocks via connector J1105. Fig. 5-20 on the next page shows the schematic diagram of the power supply circuit.

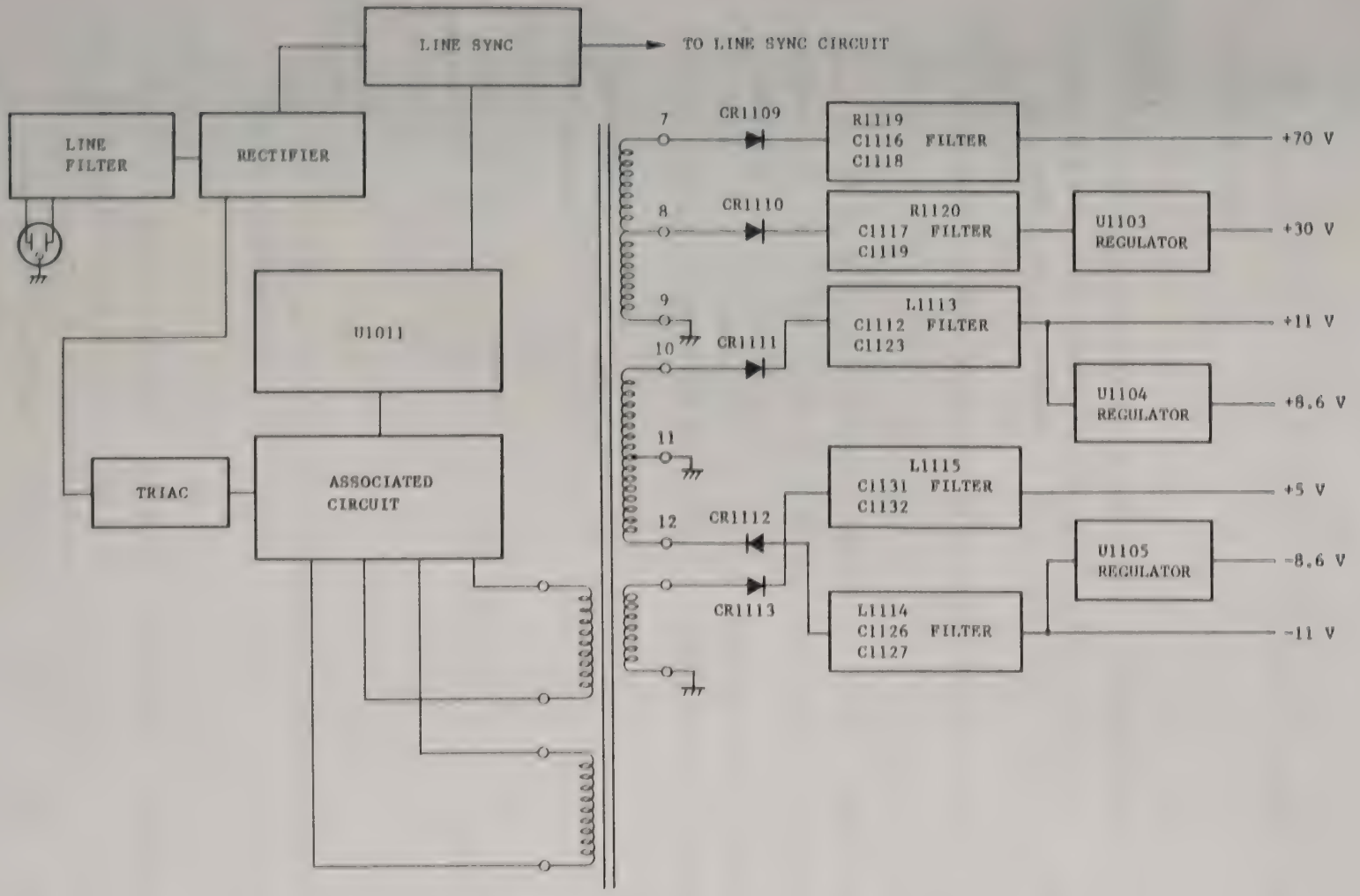

Fig. 5-20 SCHEMATIC BLOCK DIAGRAM OF POWER SUPPLY CIRCUIT

6. ADJUSTMENT

Some of the adjustment procedures described in this Section require servicing after removal of exterior covers. Following precautions should be observed for safety.

WARNING

- Dangerous voltages exist at several points in the VP-5610P. Internal servicing must be performed by qualified service personnel.
- Disconnect the power cable from the mains supply before removing the covers.
- When servicing with power on, particular care must be paid to avoid personal injury. After removing the covers with the power cable disconnected, mount the instrument on the bench securely so that the portion to be serviced is easily accessible. Then, connect the power cable and turn the power on. Do not touch exposed connections or components while the power is on.
- Do not service alone. Do not perform internal service unless another person capable of rendering first aid and resuscitation is present.

6.1 MAINTENANCE

6.1.1 Cleaning

Exterior:

Dust on the panels should be removed with a soft cloth. Dirt that remains may be removed with a soft cloth containing mild detergent water solution.

CAUTION

Avoid use of chemical agents containing benzen, toluene, xylene, acetone or similar solvents.

CRT screen:

Remove the four screw on the corners of the CRT bezel and then the bezel with the tinted light filter. Clean the CRT surface with a soft cloth containing either alcohol or water solution of mild detergent. It is advised not to clean the tinted light filter because cleaning might result in scratches on the surface.

6.2 PREPARATION

Turn the power supply on and allow the instrument to warm up at least 15 minutes with the following conditions:

Mains voltage: ±2% from the specified voltage

Ambient temperature: 25°C ±5°C

CRT:

- INTENSITY control: As needed (Fully counterclockwise)
- FOCUS control: Mid-position
- POSITION control: Mid-position
- SCALE ILLUM (Side panel): Turn fully counterclockwise
- CHARACTER INTEN (Side panel): Mid-position

Vertical deflection:

- VOLTS/DIV setting: 5 mV
- POSITION controls: Mid-position
- AC-GND-DC switch groups: GND
- MODE switch group: CH1
- POLARITY switch: NORM
- BW switch: FULL
- CH1 and CH2 VARIABLE (Side panel): CAL

Horizontal deflection

- A TIME: As needed
- B TIME: As needed
- A VARIABLE control (Side panel): CAL
- Sweep mode switch group: AUTO
- Display mode switch group: A
- x10 MAG: OFF
- CH3 POSITION (Side panel): Mid-position
- HOLDOFF control (Side panel): MIN
- AUTO RANGE switch: OFF
- FREERUN switch: OFF
- FIX switch OFF

Triggering

- LEVEL controls: Mid-position
- SLOPE switches: +
- COUPLING switches: AC
- SOURCE switch: CH1

If the VP-5610P is with the GP-IB option, make sure that GP-IB switch under the blind cover on the side panel is set to LOCAL, which is the setting when the instrument is shipped from the plant.

Turning the power supply on simultaneously pressing both GND switches of AC-GND-DC selectors provides the above settings with the exception of SOURCE switch. Of course manual operations are required for control settings.

6.3 TEST EQUIPMENT REQUIRED

Digital voltmeter

Range: 0 V to 150 V
Error limit: ±0.15%
4 1/2 digit display

DC voltmeter

Range: 0 V to 2500 V
Error limit: ±1% at 2000 V

Square-wave generator

Frequency 1kHz to 100 kHz
Rise time: < 20 ns
Amplitude error: ±0.5%

Fast-rise square-wave generator

Rise time: < 1 ns
Frequency: 400 kHz to 1 MHz

Time-marker generator

Marker output: 10 ns to 0.5 s
Error limit: ±0.1%

Sinewave generator

Frequency: 50 kHz to 100 MHz

Amplitude error: ±3%

Attenuator

50 Ω, 20 dB (10:1)

BNC male and female connectors

Termination

50 Ω BNC male and female connectors

Standard probe

VQ-057Y21:

Attenuation: 10:1

Attenuation accuracy: ±2%

Bandwidth: DC to 100 MHz

R in: 10 MΩ

Other than the above, an insulation resistor meter and LC meter with adequate error rates and a 14-pin extension connector specified for used in VP-5610P adjustments are required. The 14-pin extension connector is used to separate the rear part of VP-5610P in which the power supply board is installed.

6.3.1 Printed circuit board configuration

Due to the necessity of placing various printed circuit board within the limited dimension in addition to other functional and constructional components, good number of various sized printed circuit boards are installed, which are listed on the next page. Reference numbers are provided for convenience to find a specific board from silk screen prints attached after the Parts List, Section 7 of this Manual.

In finding the locations of adjustments and trimmers, it is required for readers to understand well the positions of printed circuit boards. On the following four pages, photographs of all printed circuit board are provided with their names and reference numbers.

The variable resistor and trimmer numbers used in Section 6 are identical with those used in circuit diagrams provided in Section 8 of this Manual, which will be also found on the Part Placement diagrams (silk screen prints).

PCB name	Reference number	Page
CRT CONTROL	2G-40-1489-E	6-6
PANEL-2	2G-40-1406	6-6
ANALOG-1	1G-40-1336	6-7
ANALOG-2	1G-40-1305	6-7
ATT1	4G-40-1294	6-7
ATT2	4G-40-1293	6-7
POWER	2G-40-1489-D	6-8
V MAIN	2G-40-1489-A	6-8
PANEL-3A	2G-40-1490-A	6-8
PANEL-3B	2G-40-1490-B	6-8
PANEL-3C	2G-40-1490-C	6-8
CHARACTER	2G-40-1490-D	6-8
PANEL-3	2G-40-1490-E	6-8
CPU BOARD	3G-40-1443	6-8
HV-1	2G-40-1489-B	6-9
HV-2	2G-40-1489-C	6-9

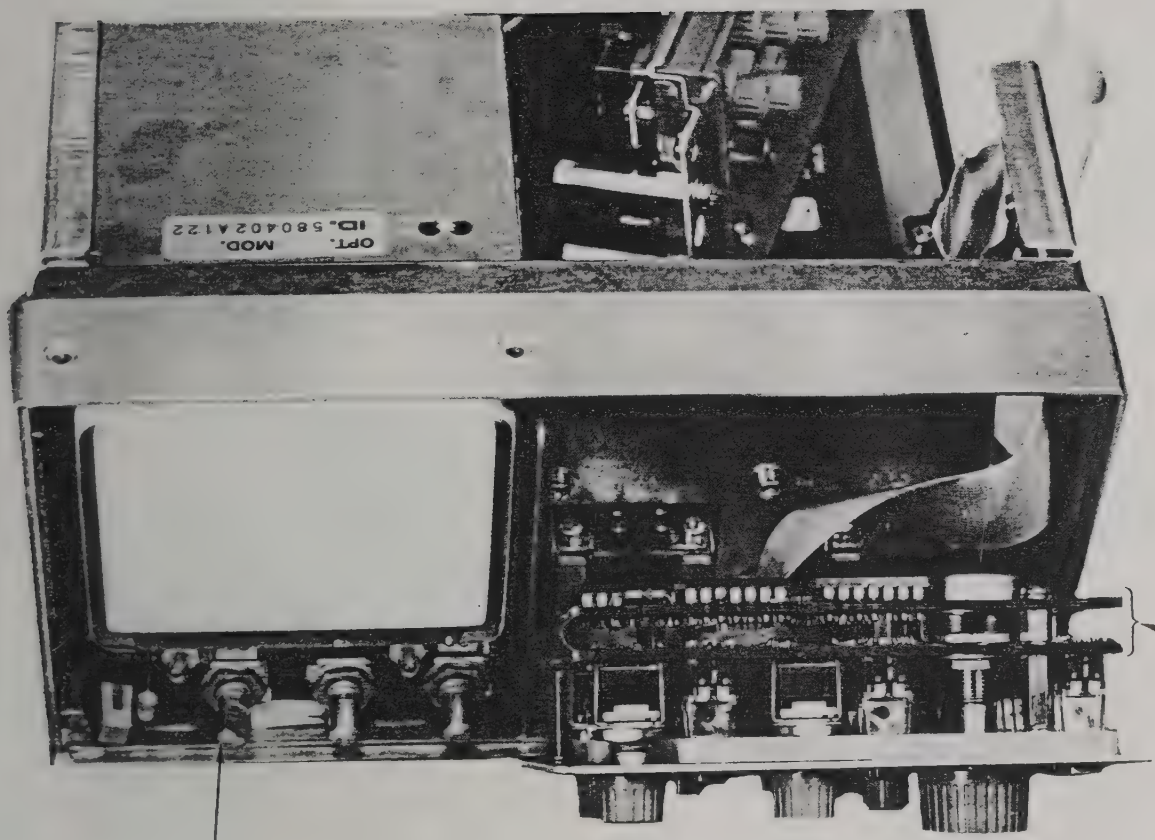

CRT CONTROL board (2G-40-1489-E)

Front panel

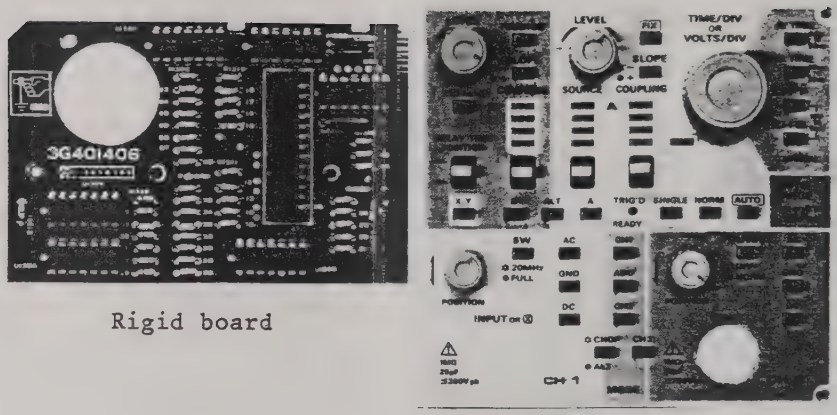

Rigid board

Being bent here with proper radius

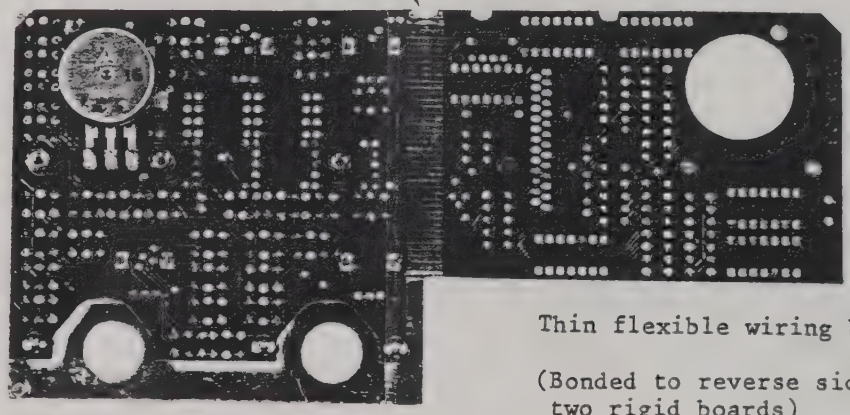

ANEL-2

Thin flexible wiring board

(Bonded to reverse side of two rigid boards)

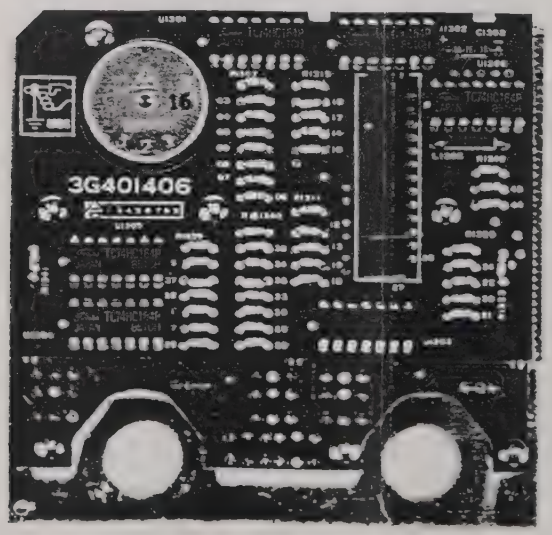

PANEL 2
3G-40-1406
(TOP View)

INPUT ATTENUATOR (CH2)

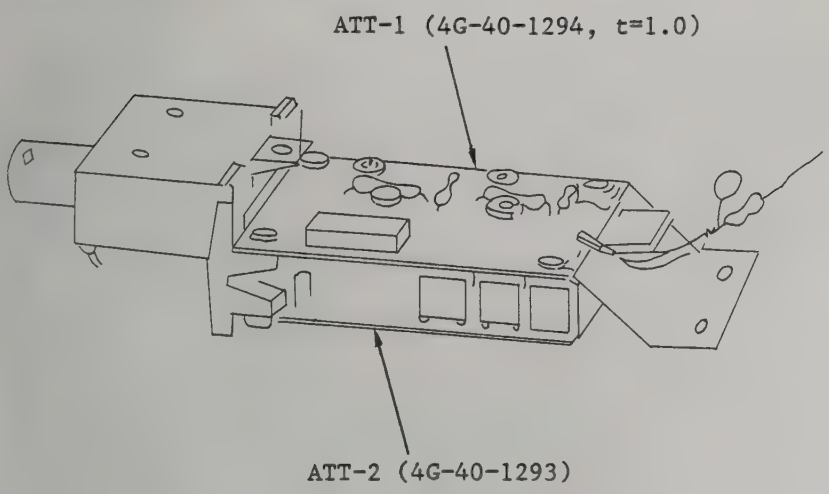

INPUT ATTENUATOR (CH1)

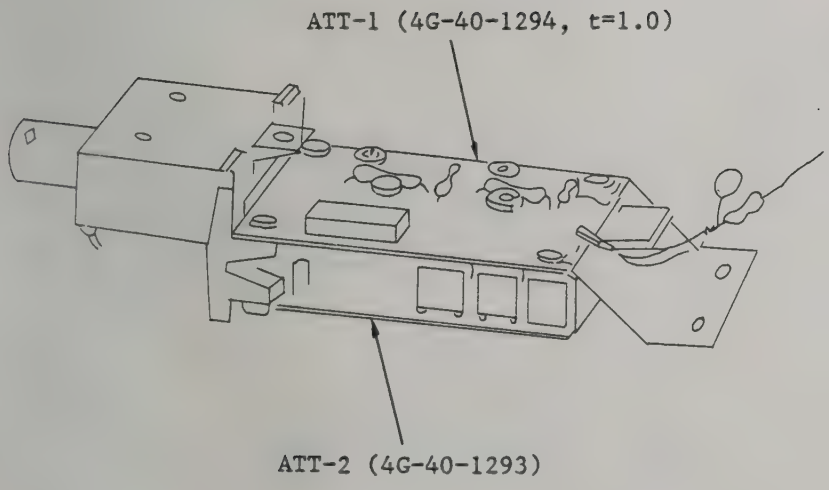

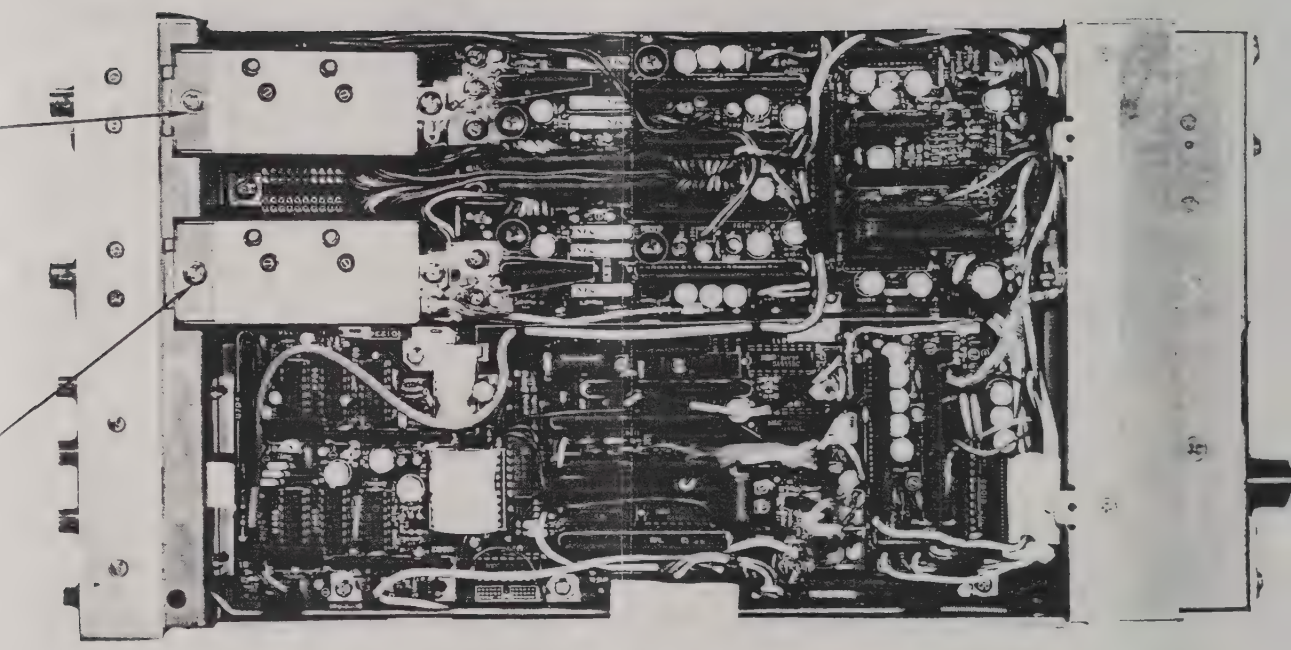

Upper ANALOG (1)

LOWER ANALOG (2)

Mother board to which CHARACTER CPU and GP-IB boards are connected

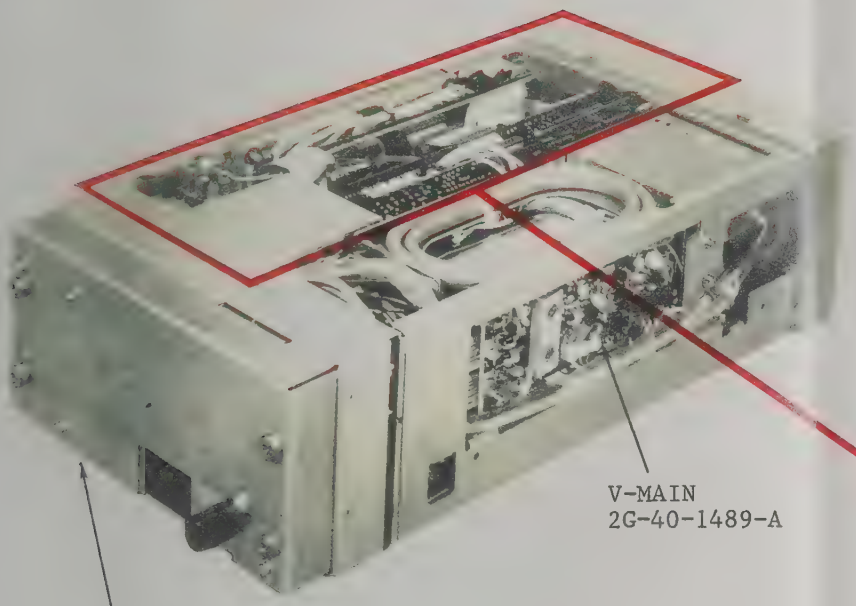

In the power supply box:
POWER board (2G-40-1489-D)

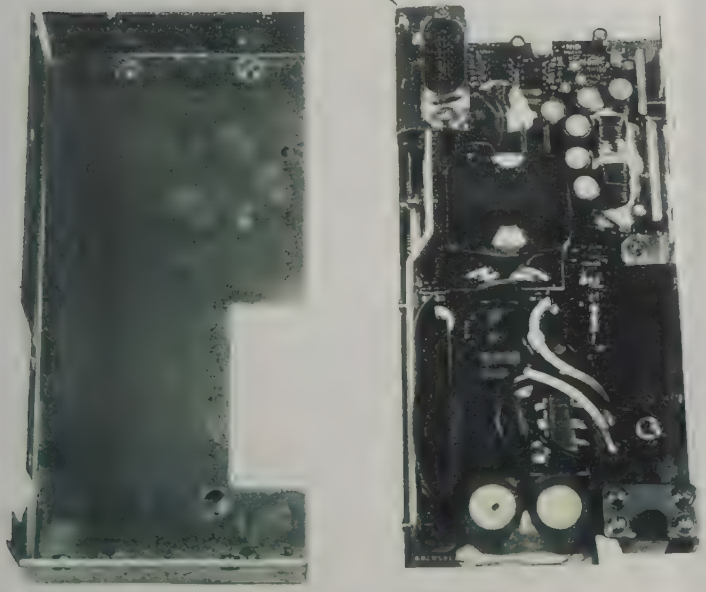

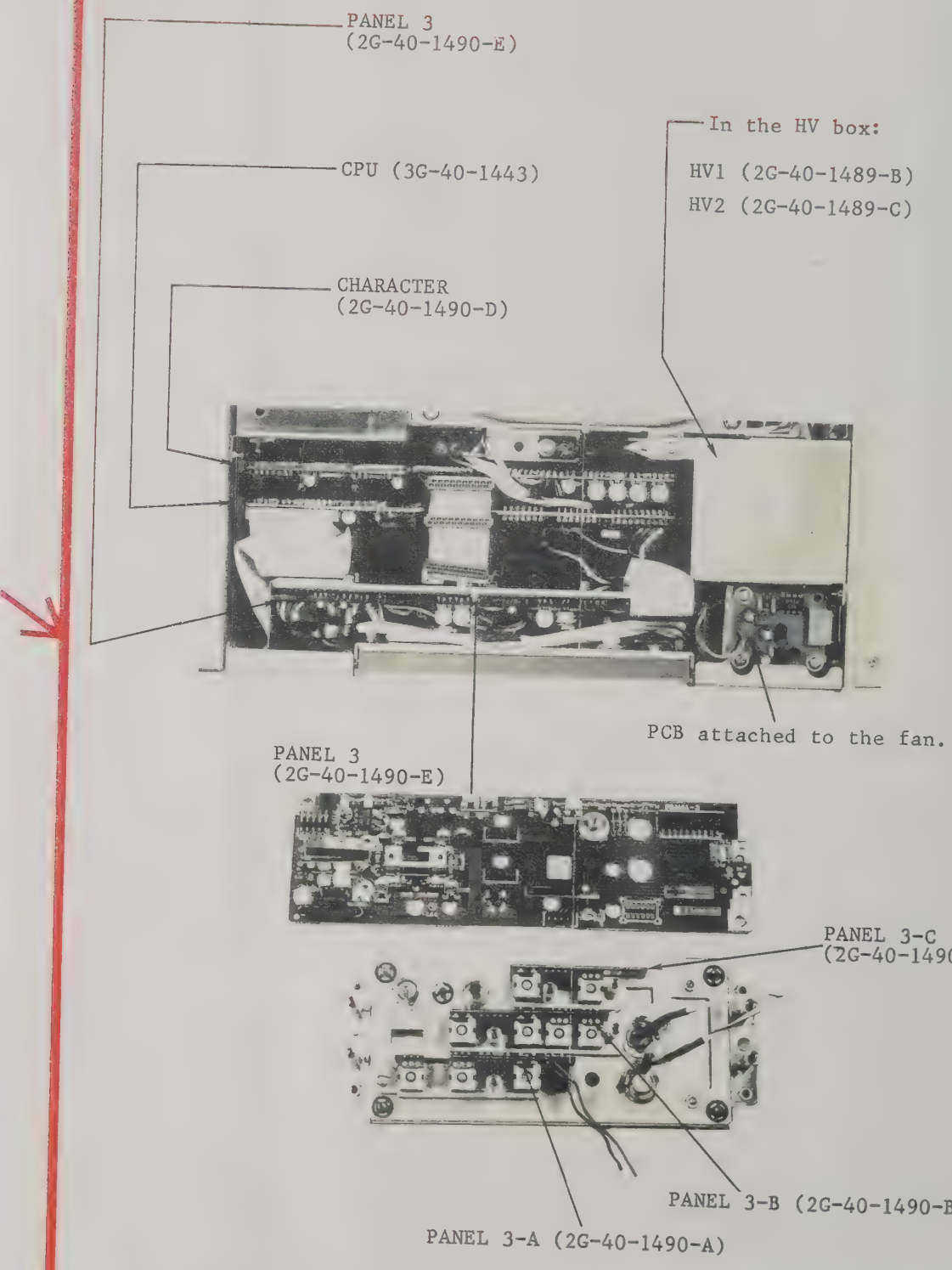
PANEL 3
(2G-40-1490-E)
In the HV box:
HV1 (2G-40-1489-B)
HV2 (2G-40-1489-C)
CPU (3G-40-1443)
CHARACTER
(2G-40-1490-D)
PCB attached to the fan.
PANEL 3
(2G-40-1490-E)
PANEL 3-C
(2G-40-1490-C)
PANEL 3-B (2G-40-1490-B)
PANEL 3-A (2G-40-1490-A)

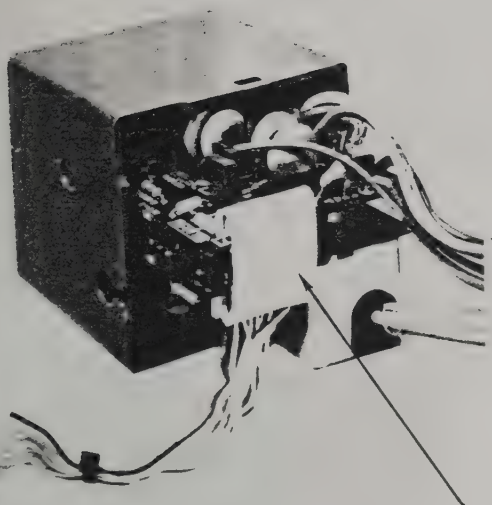

Upper: HV-1 (2G-40-1489-B)

Lower: HV-2 (2G-40-1489-C)

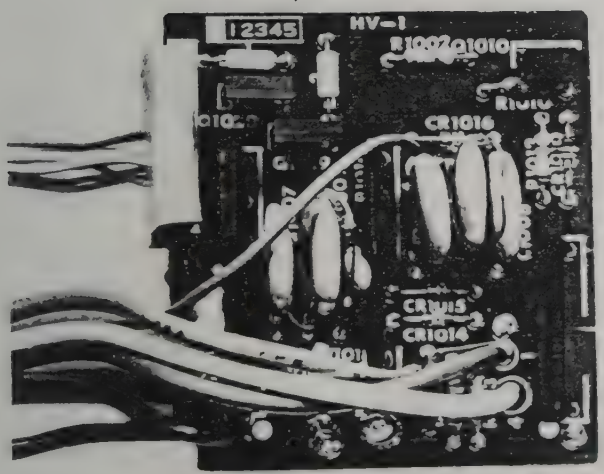

HV-1 (2G-40-1489-B)

HV-2 (

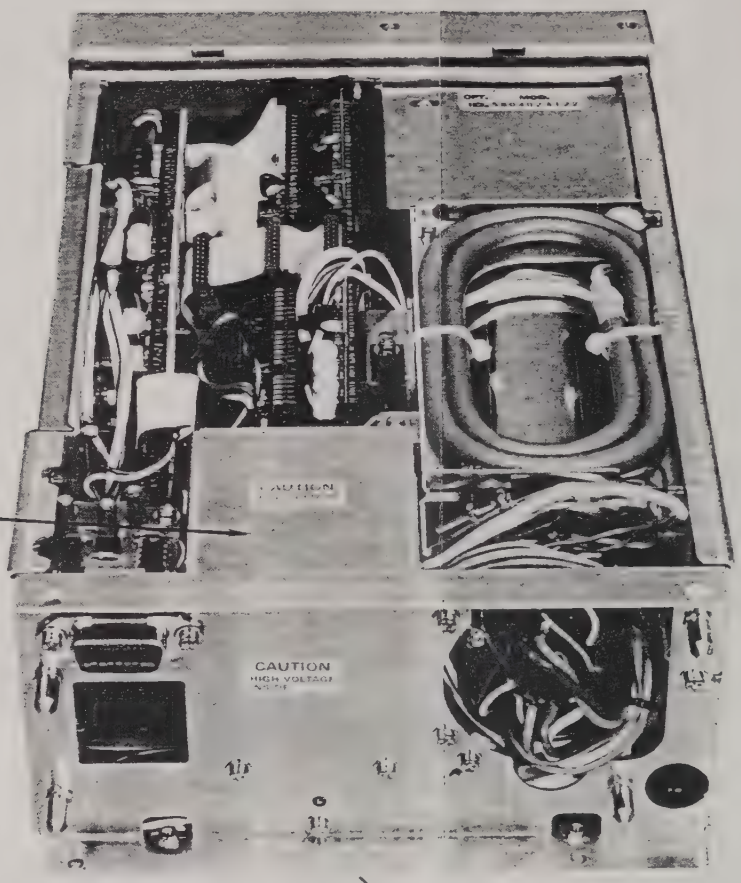

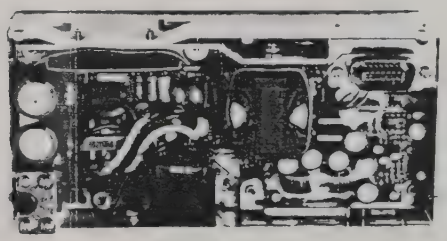

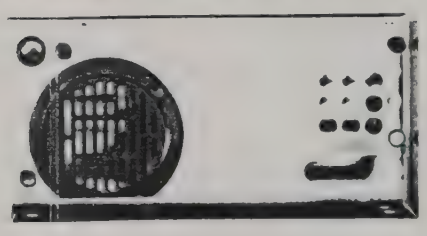

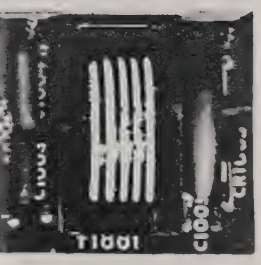

40-1489-C)

POWER (2G-40-1489-D)

6.4 POWER SUPPLY AND CRT CIRCUIT ADJUSTMENTS

6.4.1 WAVE adjustment

Adjust R1115 so that the power consumption will be the smallest at 250 ACV.

6.4.2 +5 V and -8.6 V adjustment

Set to SCALE OFF and allow the instrument to warm-up at least one hour. Adjust +5V adjustment R1112 for the minimum value within the specified range of +5.10 V and +5.20 V at 100 ACV. Adjust -8.6 V adjustment R1125 for a voltage between -8.514 and -8.686.

After the above adjustments, check that each power supply when measured at the check point shown in Fig. 6-1 is within the following specified value:

+5 V: +4.75 V to +5.25 V
+8.6 V: +8.43 V to +8.77 V
+30 V: +28.8 V to +31.5 V
-8.6 V: -8.514 V to -8.686 V

When the adjustments and checks are complete, check that the instrument operates normally with power supply voltage between 90 ACV and 250 ACV.

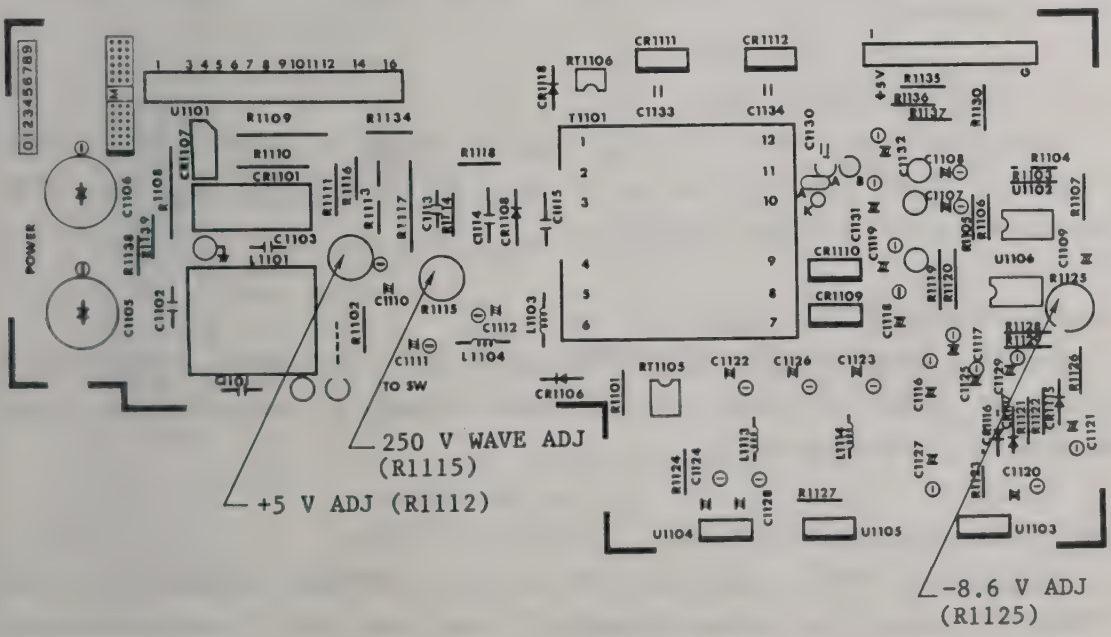

Fig. 6-1 Power board

6.4.3 TRACE ROTATION

Supply a square-wave signal from the CH1 INPUT connector and position the trace on the center of the screen with the vertical POSITION control. Adjust the TRACE ROTATION adjustment so that the trace is parallel to the central horizontal graticule.

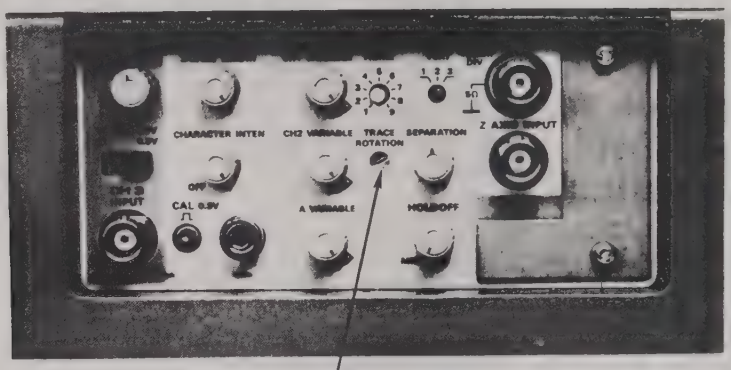

Fig. 6-2 TRACE ROTATION

6.4.4 High-voltage adjustment (See Fig. 6-3.)

Adjust HV adjustment R1005 so that the voltage measured at pin 7 of the black CRT receptacle is -1.5 kV ±2%. For adjustment, remove the power supply pack and connect it with the main body with the specified extension cord with 14-pin connectors.

6.4.5 FOCUS (See Fig. 6-3.)

Supply a 50-kHz, 8-div sinewave to either CH1 or CH2 INPUT. Adjust FOCUS adjustment R1029 so that the display focus is the sharpest when the FOCUS control is set at the mid-position.

6.4.6 ASTIGMATISM (See Fig. 6-3.)

Supply a 50-kHz, 8-div sinewave to either CH1 or CH2 INPUT. Adjust ASTIG adjustment R1021 together with the FOCUS control to minimize the trace deviation and out-of-focus.

6.4.7 CRT BIAS (See Fig. 6-3.)

Adjust CRT BIAS adjustment R1001 so that the trace appears when the INTENSITY control is turned around 45° from the fully counterclockwise position.

Fig. 6-3 shows the locations of FOCUS, ASTIGMATISM and CRT BIAS adjustments.

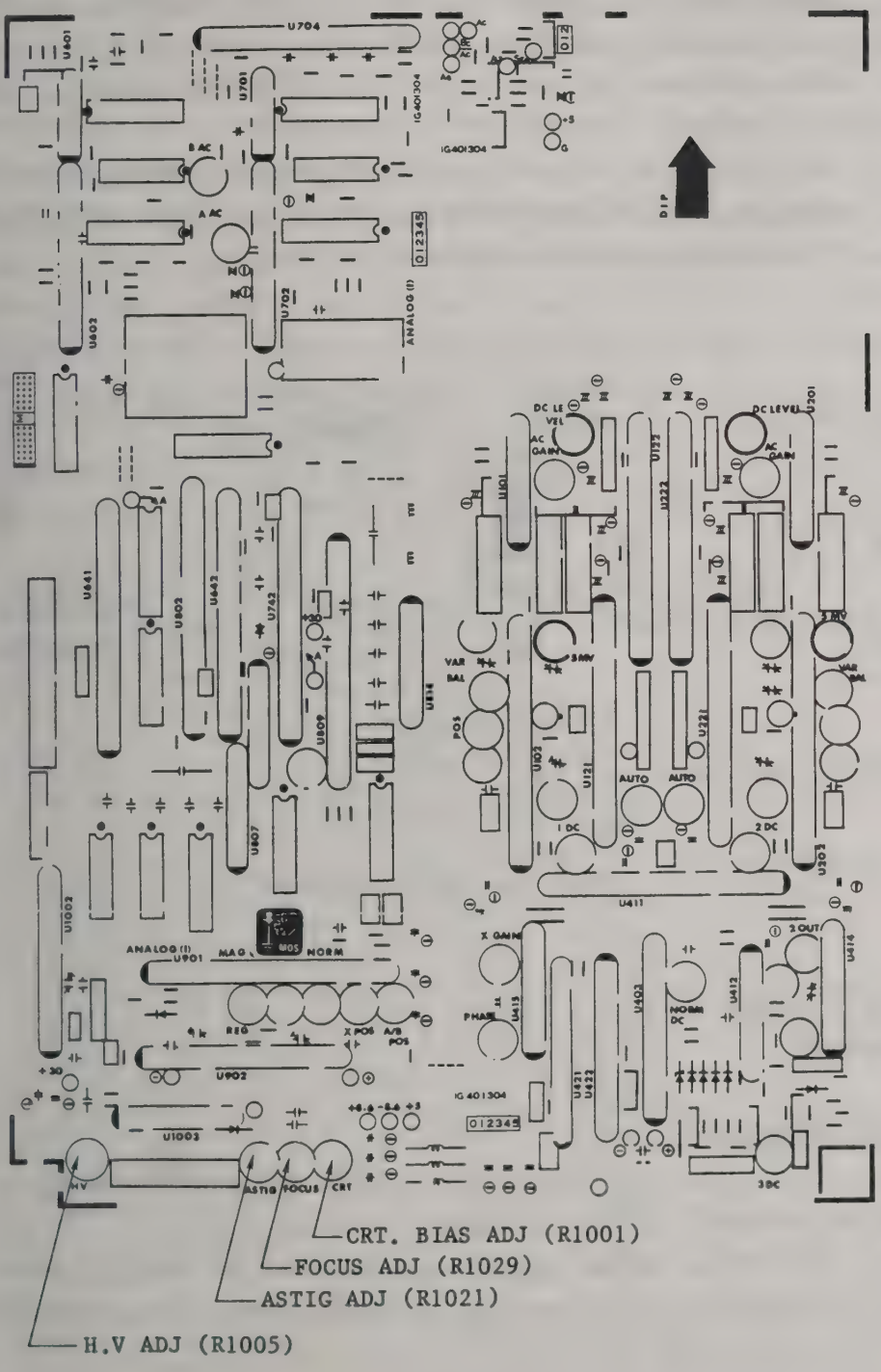

Fig. 6-3 ANALOG-1 board

6.4.8 CALIBRATOR (See Fig. 6-4.)

Connect a digital voltmeter with the CALIBRATOR terminal on the side panel. Press both GND keys of CH1 and CH2 simultaneously to stop the oscillation. Adjust CAL adjustment R1338 for 0.3 V ±1.5 mV.

An 1-kHz square-wave is output from the CALIBRATOR terminal. When the oscillation is stopped, the DC level becomes nearly 0.3 V. The CAL adjustment is used as a fine adjuster to set the voltage within the specified range. When the VOLTS/DIV coefficient is set to 5 mV, the waveform measured with an oscilloscope via a 10:1 probe will be 6 div.

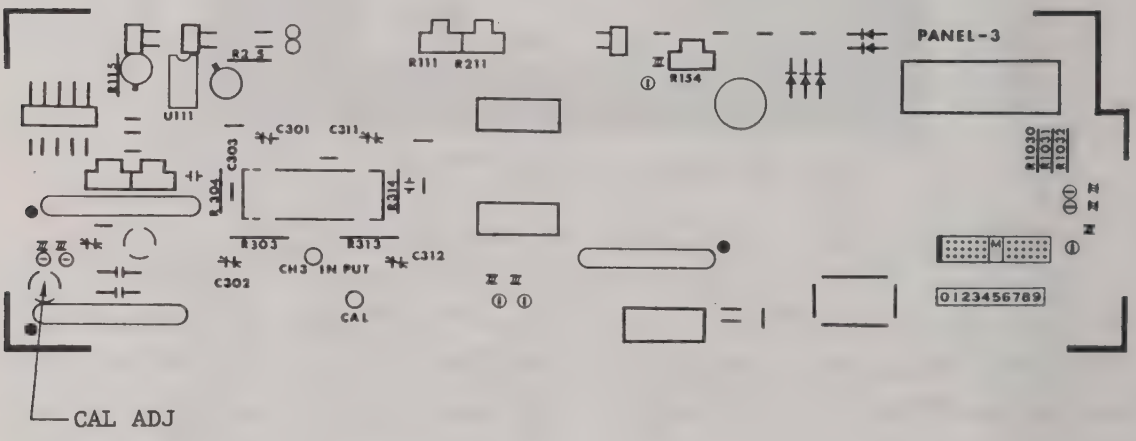

Fig. 6-4 CAL adjustment

6.5 VERTICAL

6.5.1 DC LEVEL (See Fig. 6-5.)

Press GND switches of CH1 and CH2 AC-GND-DC selectors. No input signal is required for the DC LEVEL adjustment.

Adjust DC LEVEL adjustments R105 and R205, for CH1 and CH2 respectively, so that the trace is not shifted when the vertical volts/div is changed from 5 mV, 10 mV and 20 mV.

6.5.2 VARIABLE BALANCE (See Fig. 6-5.)

Settings are the same as those for the DC LEVEL adjustment. Set the volts/div to the standard setting, 5 mV. Adjust VARIABLE BAL R108 and R208 for CH1 and CH2, respectively, so that the trace does not shift when the VARIABLE control is turned.

6.5.3 POSITION CENTER (See Fig. 6-5.)

Settings are identical with those of VARIABLE BALANCE adjustment. Adjust POSI CEN adjustments R103 and R203 on the ANALOG-1 board for CH1 and CH2, respectively, so that the trace is positioned at the center of screen when the POSITION controls on the front panel is set to their mid-positions.

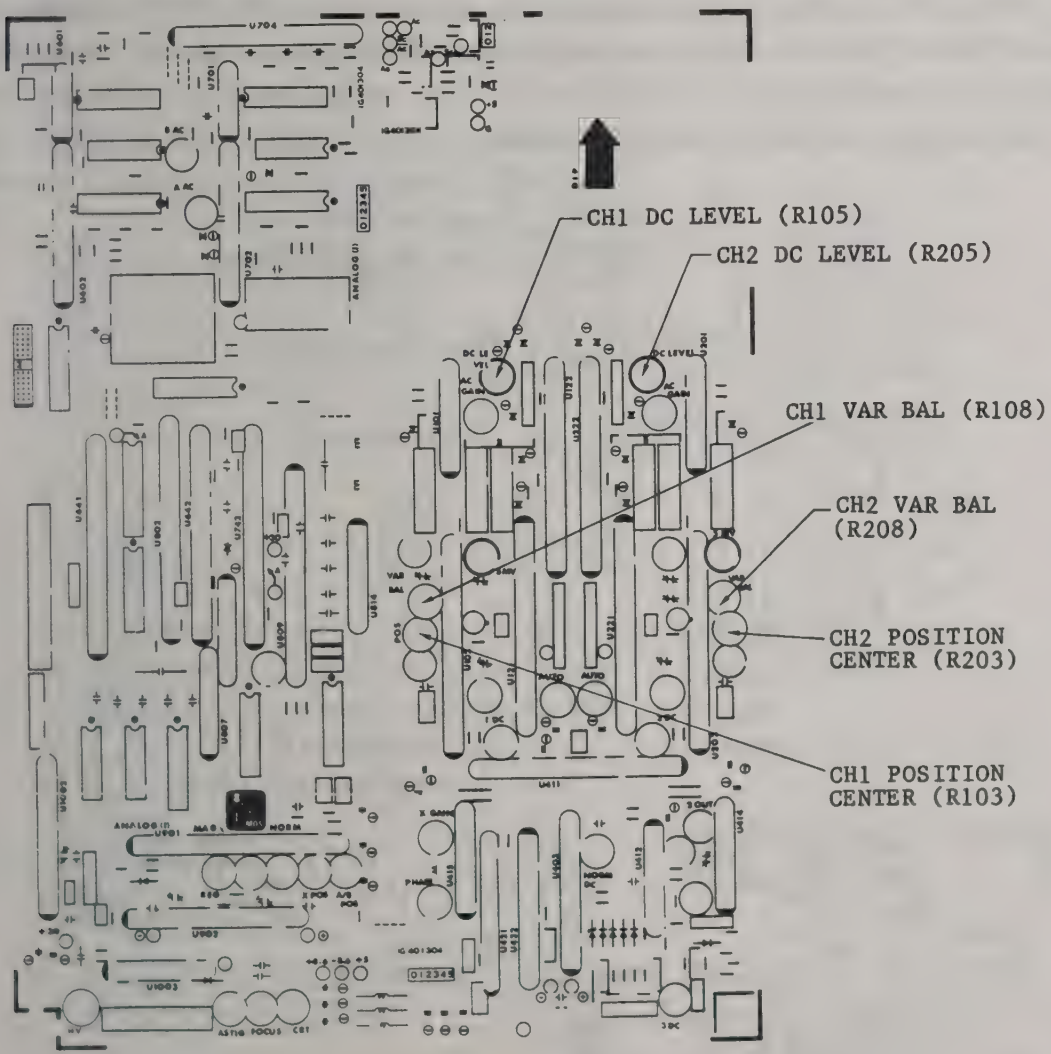

Fig. 6-5 ANALOG-1 board

6.5.4 AC GAIN (See Fig. 6-6.)

Confirm that the volts/div is set to 5 mV and supply a 100-Hz, 6-div square-wave. Adjust R106 and R206 for CH1 and CH2, respectively, for a flat square-wave trace display.

6.5.5 CH1 and CH2 VARIABLE adjustments (See Fig. 6-7.)

Set VARIABLE controls on the side panel to their CAL positions. Set CH1 and CH2 VARIABLE adjustments R112 and R212 on the PANEL-3 board at the points that corresponding vertical gain begins to decrease.

6.5.6 5 mV/div GAIN adjustment (See Fig. 6-6.)

Supply an 1-kHz, 20 mV square-wave signal to the CH1 INPUT connector. Adjust R107 for 4-div trace on the screen (confirm that the CH1 volts/div setting is 5 mV/div).

Adjust R207 for CH2 in the same manner.

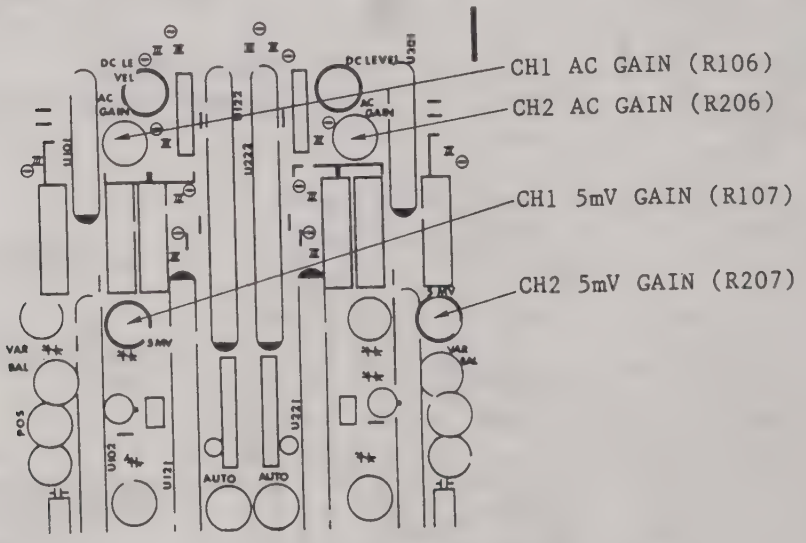

Fig. 6-6 Part of ANALOG-1 board

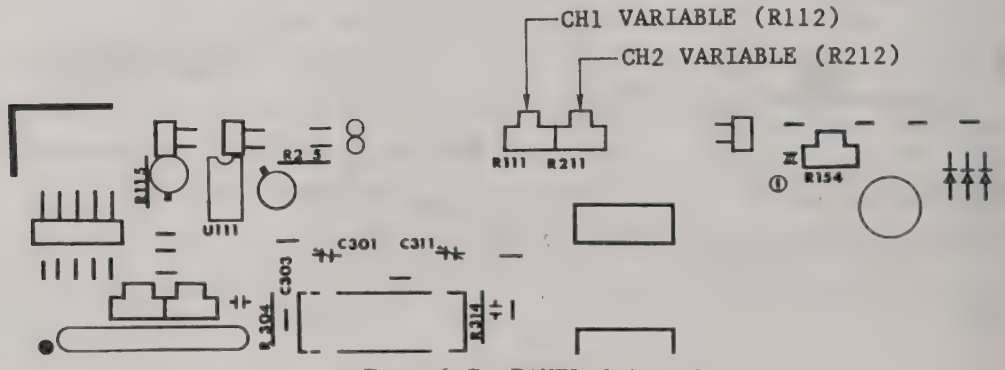

Fig. 6-7 PANEL-3 board

6.5.7 CHOP crosstalk

Set the MODE switch group to CHOP and supply an 1-kHz square-wave. Adjust so that there will be no interruption or influence to other channels.

Change the input frequency to 100 Hz and perform the same adjustment.

6.5.8 DC SHIFT

Supply an 1-kHz, 8-div amplitude input signal. Adjust so that the trace is not shifted momentarily when the AC-GND-DC selector is switched from GND to DC. The maximum allowance for DC shift is 0.1 div or less at 0.1 second.

6.5.9 CH2 SIG OUT GAIN (See Fig. 6-8.)

Connect the CH2 SIG OUT BNC connector on the side panel with the CH1 INPUT BNC connector via RG58A/U cable (50 Ω). Set CH1 and CH2 volts/div to 5 mV and supply an 1-kHz square-wave to the CH2 INPUT connector. Select CH1 of the MODE switch group. Adjust CH2 SIG OUT GAIN adjustment R423 on the ANALOG-1 board for a 5-div trace (1 mV/div).

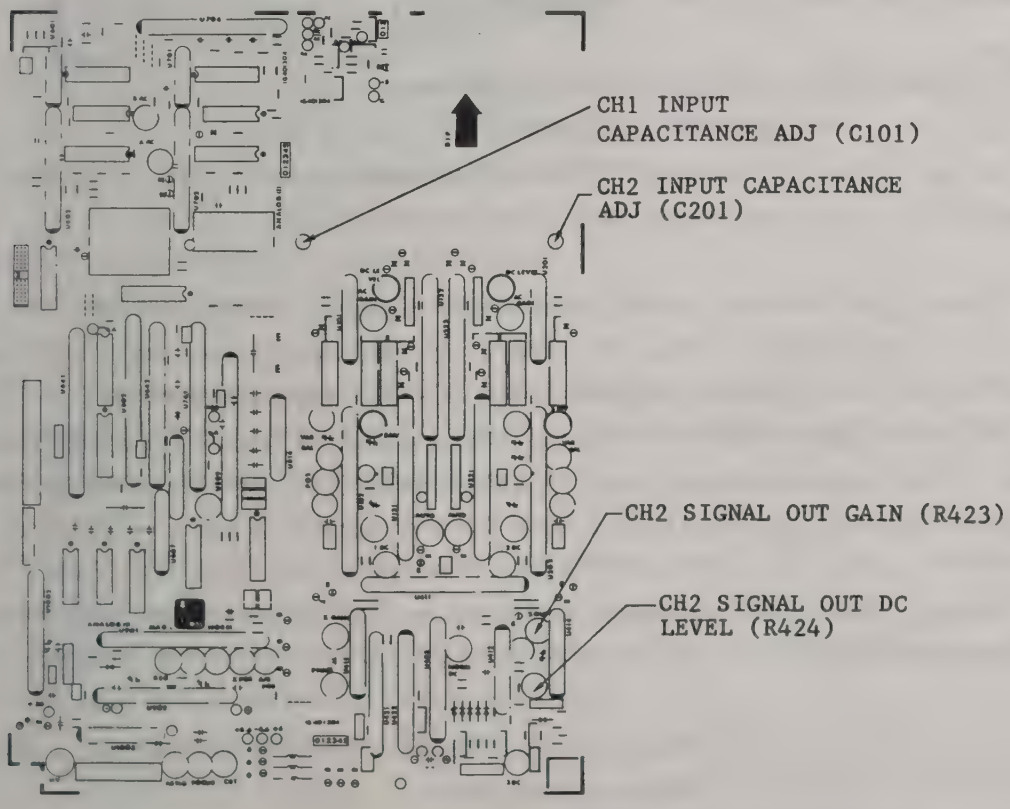

Fig. 6-8 ANALOG-1 board

6.5.10 CH2 SIG OUT DC LEVEL (See Fig. 6-8.)

Adjust CH2 SIG OUT DC LEVEL adjustment R424 so that the output DC level of the CH2 SIG OUT connector on the side panel is "0" volt.

Note: The DC level of CH2 signal out connector is independent from the setting of CH2 POSITION control.

6.5.11 Input capacitance adjustment (See Fig. 6-8.)

Adjust CH1 input capacitance adjustment C101 for 25 pF ±2 pF when measured at CH1 INPUT BNC connector with a LC meter. Also adjust C201 for channel 2 in the same manner. See Fig. 6-8 for adjustment position on the ANALOG-1 board and Fig. 6-9 for wire connection for capacitance measurement.

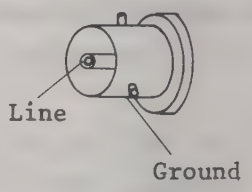

Fig. 6-9 INPUT connector

Note: The LC meter must be capable of measuring the capacitance between line (the central core of INPUT connector) and ground (the exterior core of INPUT connector) such as HP-4332A or equivalent.

6.5.12 Square-wave characteristics adjustment

6.5.12.1 Low-frequency characteristics (See Fig. 6-10.)

(1) Adjust 1 kHz, 10 kHz and 400 kHz adjustments shown in Fig. 6-10 for flat square-waves. The over-shoot should be practically 0%.

(2) Press the CHOP key of the V MODE switch group and supply 10 Hz to 100 kHz, 6-div square-wave to the CH1 INPUT. Adjust controls on the V MAIN board shown in Fig. 6-10 for the minimum crosstalk and flat square-wave.

Adjust adjustment R570 for minimum fluctuation of digital display when an 1-kHz, 8-div square-wave is input. During and after these adjustment, check that the crosstalk to CH2 is less than 0.1 div against 1-kHz, 6-div input.

(3) Repeat the above procedures for optimum flat square-wave display and minimum crosstalk.

(4) Set the CH1 and CH2 ranges as follows and check the flatness of square-wave and DC shift within the specified value.

CH1: 20, 10, and 5 mV/div

CH2: 20, 10, and 5 mV/div

All the above adjustments are closely correlate each other and single one should never be adjusted. Since complicated and delicate adjustments are required to obtain the optimum condition, avoid to try adjusting these controls and trimmers unless it is really required to do so.

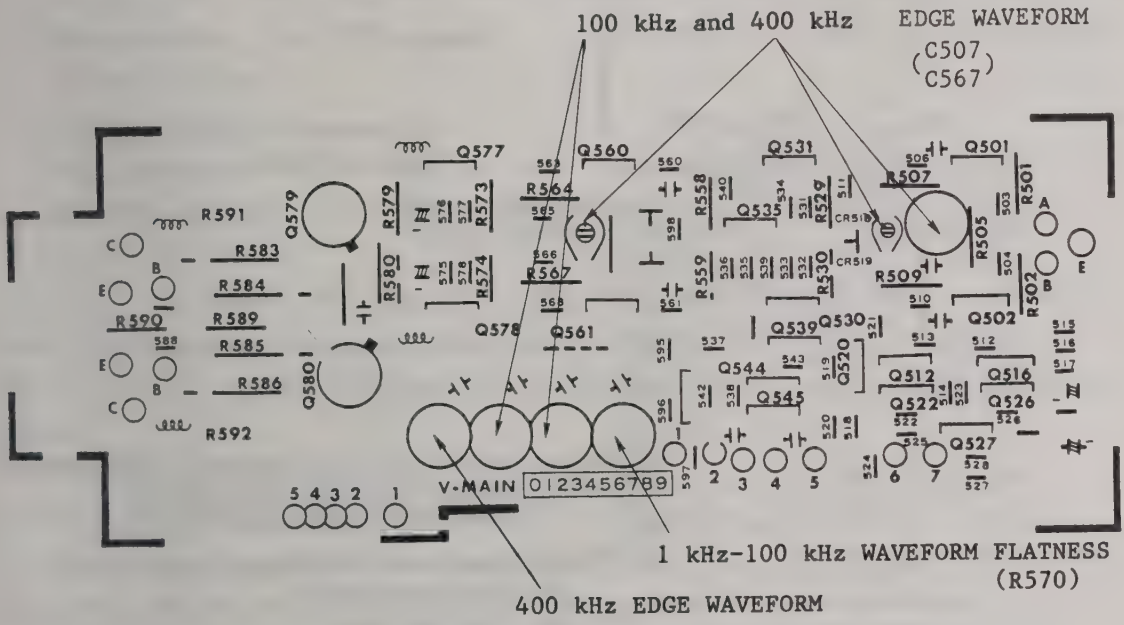

Fig. 6-10 V MAIN board

6.5.12.2 High-frequency characteristics

(1) Set sensitivities of CH1 and CH2 to 5 mV/div.

(2) Turn on the CHOP key of V MODE switch group. Supply a 10 µsec and then 0.1 µsec, 6-div signal to CH1 INPUT. Adjust trimmers C507 and C567 for minimum crosstalk and flat square-wave.

(3) Repeat the square-wave flatness adjustment with 0.1 µsec square-wave input both for CH1 and CH2.

(4) Except the square-wave flatness adjustments described above, adjust 400 kHz to 1 MHz square-wave rising portion.

Adjust trimmers C105 and C205 for CH1 and CH2, respectively, on the pre-amplifier area of ANALOG-1 board so that 100-MHz triggering occurs with 1.5-div amplitude. On the other hand, adjust trimmers C507 and C567 for CH1 and CH2 for 1-MHz square-wave. Conduct these adjustments on both AC and DC modes. See Fig. 6-10 and Fig. 6-11 for trimmer positions.

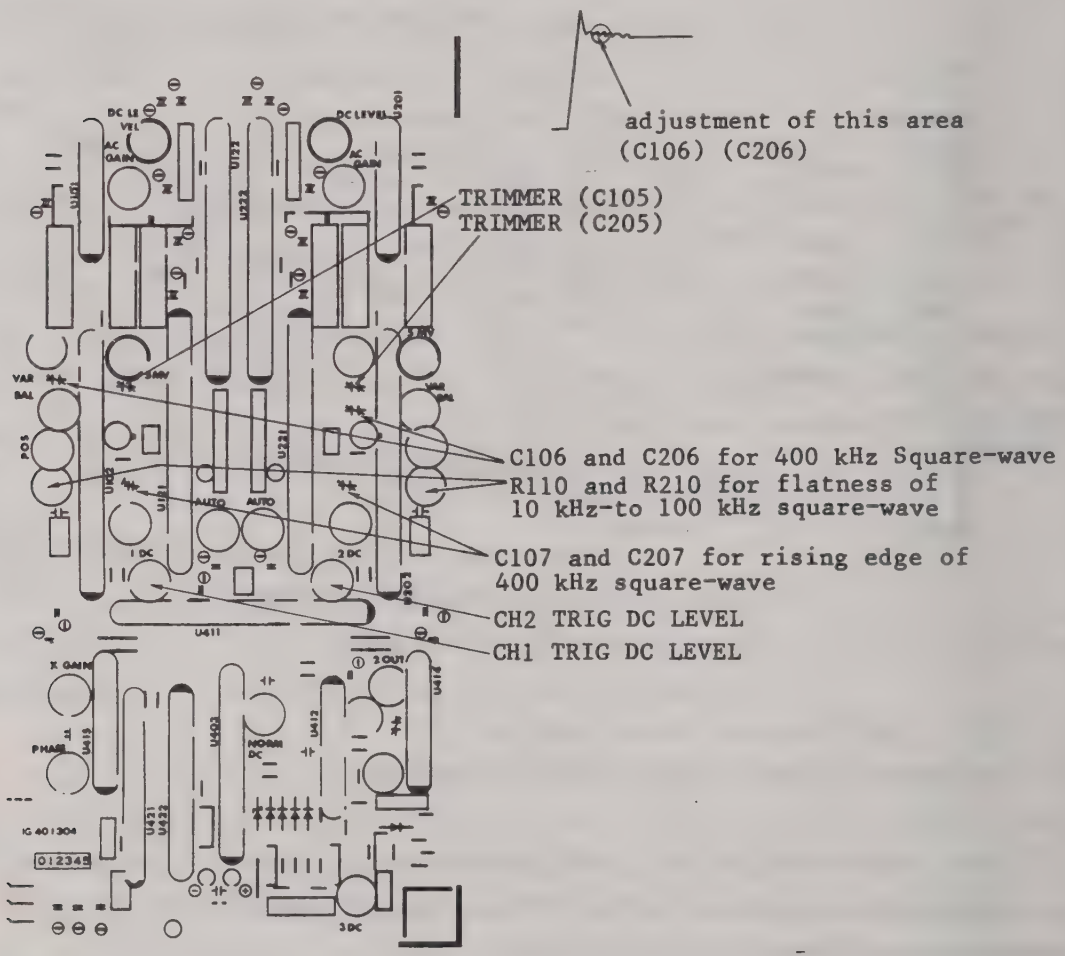

Fig. 6-11 ANALOG-1 board

When the square-wave adjustments are complete, check to see if the volts/div range of 100 MHz for both CH1 and CH2 is secured with the following procedure:

(1) Supply a 50-kHz, 6-div sinewave to CH1 and then CH2 INPUT.

(2) Trace display of 4.2 div or more is required when input signal frequency is changed to 100 MHz.

6.5.13 Attenuator adjustment

6.5.13.1 Supply an 1-kHz square-wave via the standard probe VQ-057Y21. Perform waveform compensation of the standard probe at the 5 mV/div setting with the trimmer in the probe compensation box.

(a) 50 mV/div

Adjust the flat area with INPUT trimmers C16 and C46 for CH1 and CH2, respectively. Use COMP trimmers C17 (CH1) and C47 (CH2) for compensation of the top edge.

(b) 0.5 V/div

The procedures are the same as (a), but with INPUT trimmers C13 and C43, and COMP trimmers C14 and C44 for CH1 and CH2, respectively.

6.5.13.2 Disconnect the standard probe and input the same signal directly. Check operations at each range setting of 0.2 mV, 0.1 mV, 50 mV, 0.5 V, 1 V, and 2 V/div. COMP compensation is often required as the result of these checks.

6.5.13.3 Input capacitance check

Check that the capacitance is 25 pF ±2 pF at each range setting when measured both channels 1 and 2 INPUT connectors.

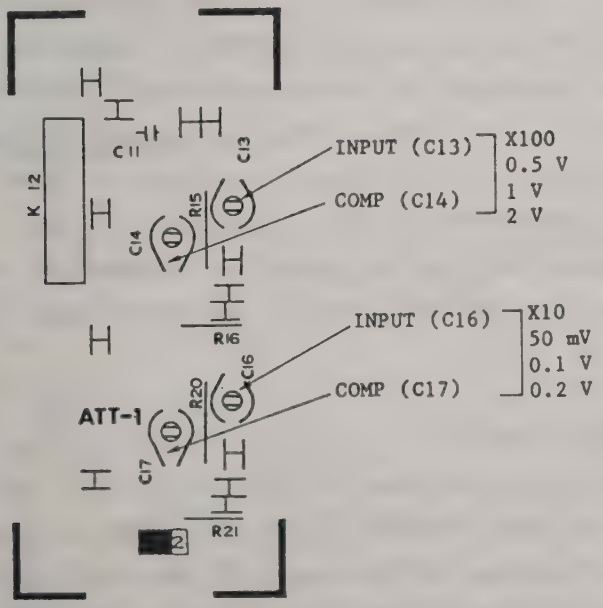

Fig. 6-12 Attenuator board

6.5.14 ADD common-mode rejection ratio

Note: Fig. 6-13 shows the test setup. The quality and length of cable between the T-branch and CH1 and CH2 connectors must be identical.

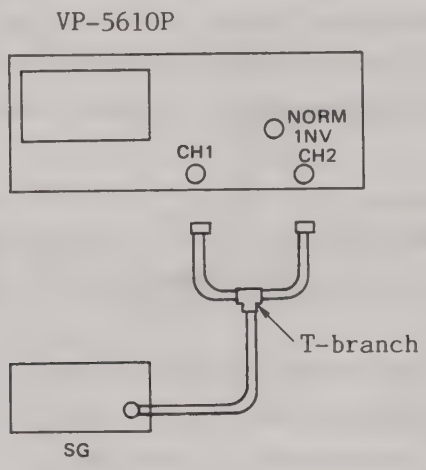

Fig. 6-13 ADD common-mode rejection ratio test setup

Supply a 50-kHz signal and adjust GAIN adjustments R107 and R207 for CH1 and CH2 on the ANALOG-1 board shown in Fig. 6-6 so that the CH1 and CH2 amplitudes are identical.

Switch the input frequency to 20 MHz and adjust for a 5-div trace with the CH2 POLARITY switch setting at NORM. Switch the CH2 POLARITY to INV. Check that the amplitude is less than 0.6 div.

Theoretically, the trace displayed should be 0 div since exactly the reverse waveform to the signal supplied to CH1 is produced and the algebraical calculation of these tow signals is zero. However, since the frequency applied is high, the crosstalk between the two channels causes some amplitude and the maximum value of 0.6 div is specified as the acceptable limit.

6.5.15 Crosstalk check

The test setup is the same as that in 6.5.14. Set CH1 and CH2 VOLTS/DIV to 10 mV/div and turn the CHOP switch of V MODE on. Check that the displayed amplitude is less than 0.3 div when CH2 GND key is pressed after setting CH1 trace to 8.0 div with 50-MHz input, or when CH1 GND key is pressed after setting CH2 trace to 8.0 div with 50-MHz input.

6.5.16 Attenuator interference

The word "attenuator interference" is used to mean the leakage interference of the CH1 signal to CH2 attenuator.

The test setup is the same as that in 6.5.14. Press CH1 key, set CH1 VOLTS/DIV to 5 V/div and supply a 5-V, 20-MHz signal to CH1 INPUT. Press the CH2 key of the V MODE and set CH2 VOLTS/DIV to 5 mV/div. The amplitude displayed must be 0.2 div or less.

Press CH2 key, set CH2 VOLTS/DIV to 5 V/div and supply a 5-V, 20-MHz signal to CH2 INPUT. Press CH1 key of the V MODE and set CH1 VOLTS/DIV to 5 mV/div. The amplitude displayed must be 0.2 div or less.

6.5.17 CH3 GAIN

Press CH3 key of the V MODE, set CH3 volts/div to 0.1 V/div and supply a 0.5 V square-wave (approximately 1 kHz). Adjust R305 shown in Fig. 6-14 for 5-div amplitude sharp.

6.5.18 CH3 POSITION CENTER

Adjust R321 on the PANEL-3 board so that the trace is at the center of the screen when CH3 POSITION control is set at the mid-position. The specification is "center ±1 div", but adjust the trace position as close to the center as possible.

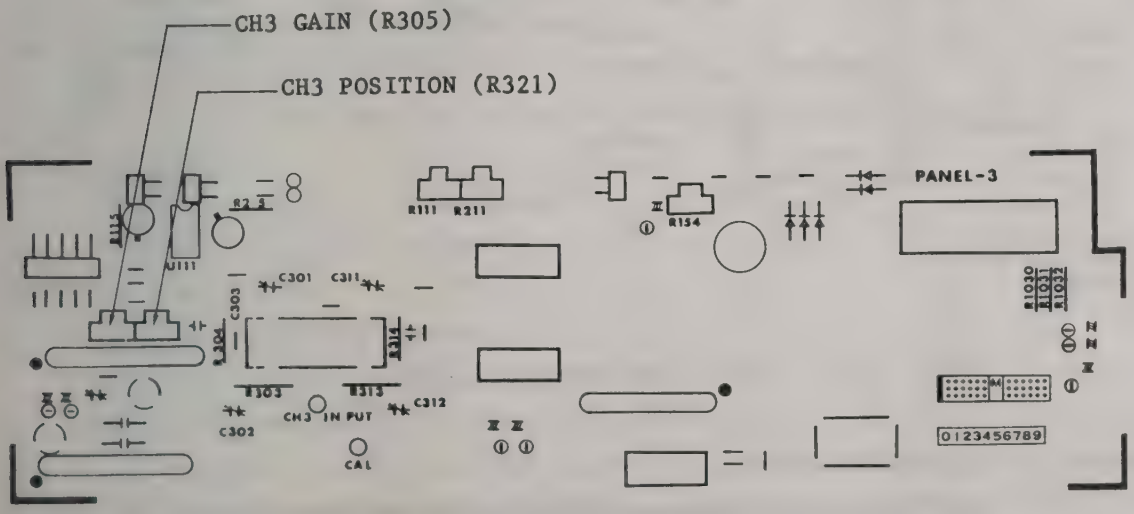

Fig. 6-14 PANEL-3 board

6.5.19 CH3 attenuator adjustment

(1) Input an 1-kHz square-wave signal to the CH3 INPUT connector on the side panel via the standard probe VQ-057Y21.

(a) 0.1 V/div adjustment

Set the CH3 VOLTS/DIV switch on the side panel to the 0.1 V position. Adjust INPUT trimmer C301 and COMP trimmer C302 shown in Fig. 6-15 for optimum waveform of the rising top edge and the flat area, respectively.

(b) 0.5 V/div

Set the CH3 VOLTS/DIV switch to the 0.5 V position. Adjust INPUT trimmer C311 and COMP trimmer C312 in the same manner as the (a) above.

(2) Disconnect the standard probe and supply an 1-kHz square-wave via RG58A/U (50 Ω) and 50 Ω termination. Switch the CH3 VOLTS/DIV from 0.5 V/div to 0.1 V/div and the other way around. Check the waveform to see if the edge is sharp and the flatness is as adjusted in the preceding Section.

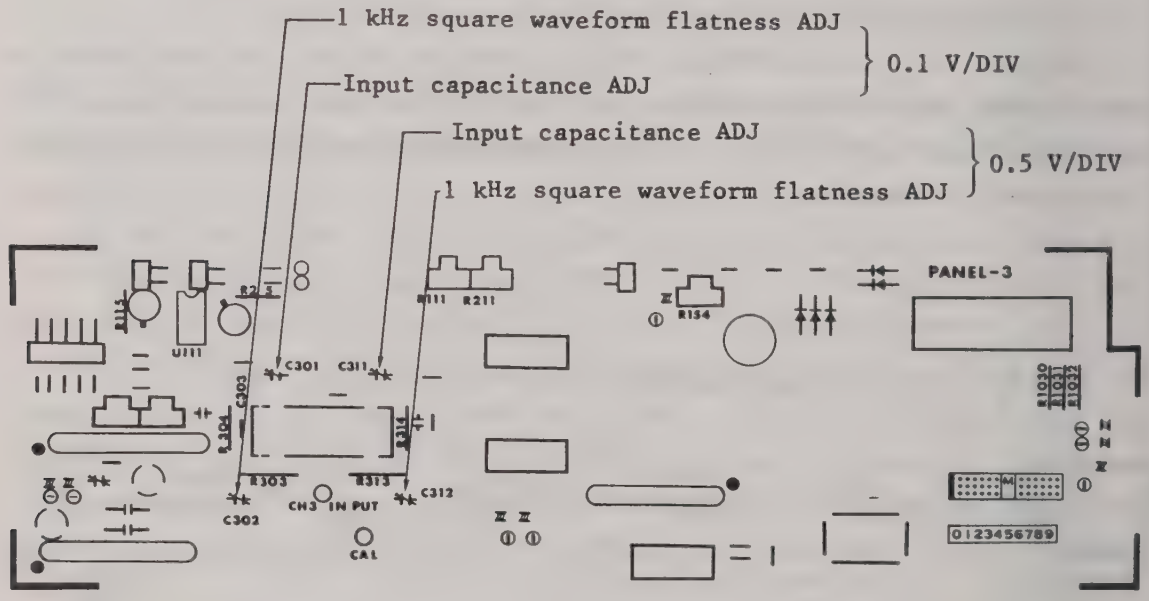

Fig. 6-15 PANEL-3 board

(3) Input capacitance check

Check that the capacitance is 25 pF ±2 pF at both the 0.1 and 0.5 V/div settings when measured at the CH3 INPUT BNC connector J301.

6.5.20 CH3 square-wave adjustment

(1) Set the CH3 VOLTS/DIV switch to the 0.1 V position. Supply a 400-kHz to 1-MHz square-wave. Adjust C305 and R307 for optimum waveform with sharp edge and flatness.

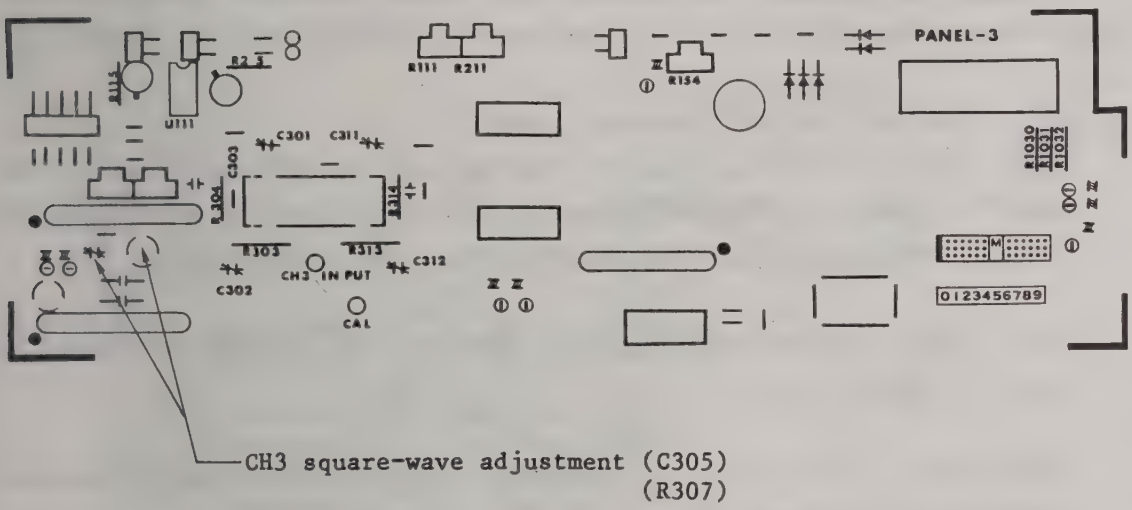

Fig. 6-16 **PANEL-3 board**

(2) CH3 frequency characteristics check

Set the CH3 VOLTS/DIV switch to 0.1 V/div. Check that the bandwidth applicable is 100 MHz and -3 dB or more. Perform the same check for the 0.5 V/div setting.

6.5.21 Other checks

6.5.21.1 UNCAL operation check

Turn CH1 and CH2 VARIABLE controls on the side panel fully clockwise until they stops at the CAL position with click sound. Set the volts/div to 5 mV/div and supply an 1-kHz, 25-mV signal to CH1 INPUT for a trace display of 5 div. Then, turn the CH1 VARIABLE counterclockwise. Observe that the trace amplitude decreases as the control is turned counterclockwise. Check that the amplitude is decreased to 1.9 div or less.

6.5.21.2 Bandwidth limit switch

Press the BW key and check the following three points:

- The frequency characteristics are less than 20 MHz.
- The LED of the key switch lights.
- Digital display on the screen is not affected when the BW switch is pressed.

To check the frequency characteristics, supply a 20-MHz, 6-div sinewave. Check that the amplitude is 4.2 or less when the BW key switch is turned on.

6.5.21.3 CHOP, ALT and ADD operation checks

CHOP: Check that the alternation rate between CH1, CH2 and/or CH3 is 500 kHz. To check the alternation rate, find the triggering point with the trigger LEVEL control and calculate from the set A sweep time.

ALT: Check that the sweep appears alternatively between channels 1, 2 and 3 in order.

ADD: Check that a trace of algebraical addition of CH1 and CH2 signals appears on the screen.

6.5.21.4 Trigger mode checks

Supply different signals to CH1, CH2 and CH3 INPUT connectors. Press CH1 of vertical MODE and select trigger SOURCE other than CH1. Check that stable triggering occurs.

Check other channels in the same way. Also check NORM triggering that the signal currently on the screen is used as the triggering source.

6.5.21.5 ALT triggering check

Supply an 1-kHz square-wave to CH1 connector and an 1-kHz sinewave to CH2. Turn on the ALT and NORM keys of the V MODE and trigger MODE. Check that both signals are stably triggered.

Also check combinations of CH1 to CH3 and CH2 to CH3.

6.6 HORIZONTAL

6.6.1 Trigger level centering

Set the A trigger LEVEL control to the mid-position. Supply an 1-kHz, 6-div sinewave to CH1 and select CH1 of the vertical MODE. Turn on the CH1 key of trigger SOURCE, the AC key of trigger COUPLING and the A key of display

mode. Adjust A TRIG CENT adjustment R1254 so that the trigger start point will be on the center of the screen.

Change the display mode to B and perform the same adjustment for the B sweep with B TRIG CENT adjustment R1256.

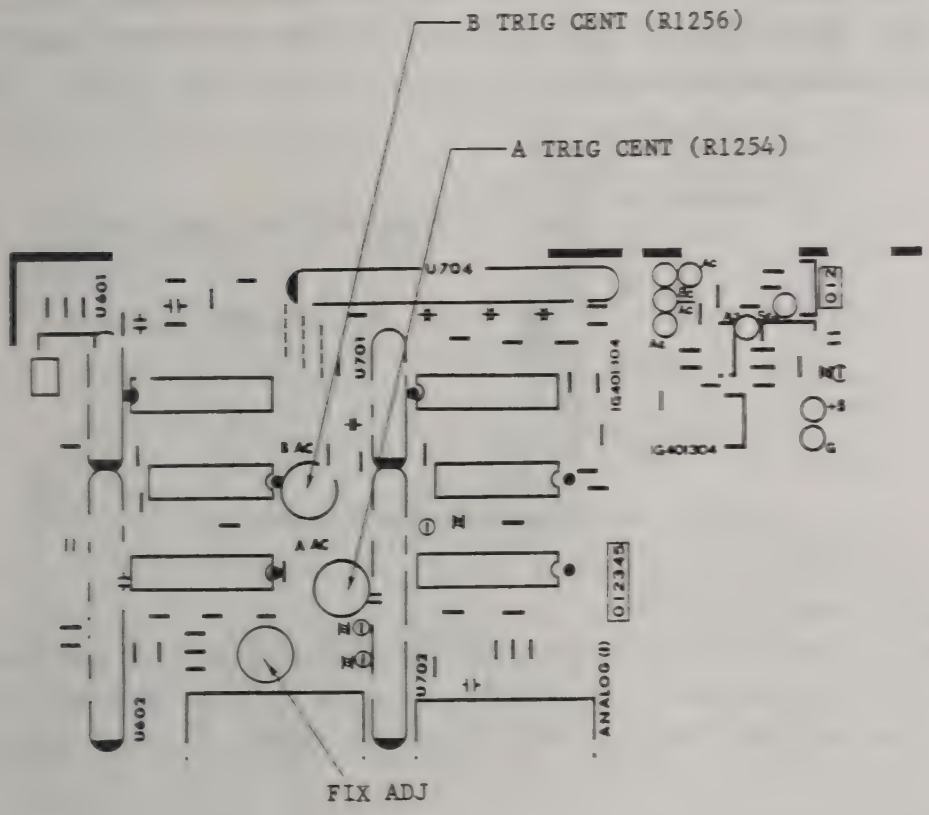

Fig. 6-17 Part of ANALOG-1 board

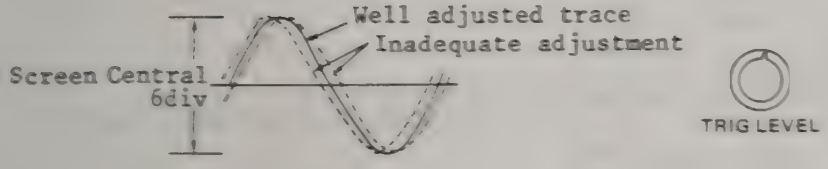

Fig. 6-18 Trigger level centering

6.6.2 Trigger DC level

Supply a 50-kHz, 2-div sinewave to CH1, select CH1 of the vertical MODE and CH1 of trigger SOURCE. Set the A TRIG LEVEL control to the mid-position. Turn the AC key of trigger SOURCE starting the triggering on the center of the screen. Press the DC key of trigger SOURCE. Adjust R418 so that the trigger start point is within ±0.3 div from the center graticule.

Perform CH2 trigger DC level adjustment for CH2 in the same manner with CH2 TRIG DC LEVEL adjustment R419.

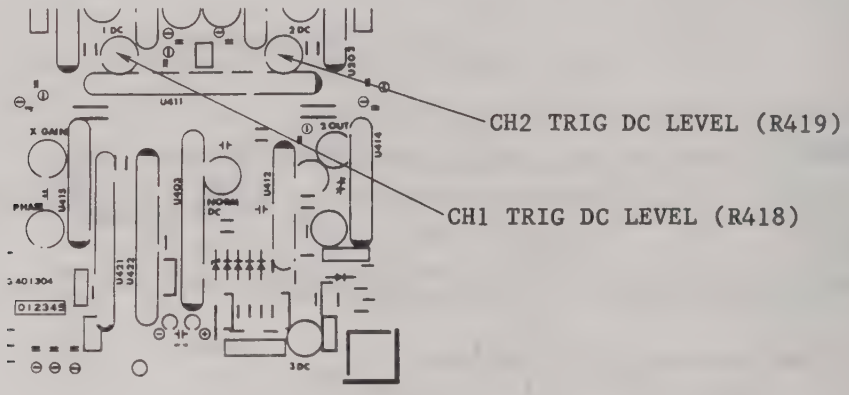

Fig. 6-19 Trigger DC level centering

6.6.3 CH3 trigger DC level

Supply a 50-kHz, 2-div sinewave to CH3 INPUT and position the trace on the center of the screen. Press CH3 keys of the vertical MODE and trigger SOURCE. Adjust CH3 TRIG DC LEVEL adjustment R428 in the same manner as 6.6.2.

6.6.4 NORM trigger DC level

Press the NORM and ADD keys of the trigger SOURCE and vertical MODE from the setting of 6.6.2. Adjust NORM TRIG DC LEVEL adjustment R422 in the same manner.

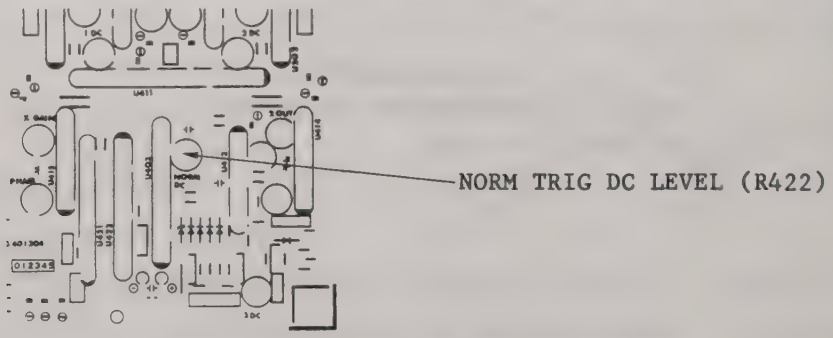

Fig. 6-20 Part of ANALOG-1 board

6.6.5 FIX triggering check

Supply a 50-kHz, 0.5-div sinewave. Set the A trigger LEVEL control to the mid-position and press the FIX key on the right hand side of the A trigger LEVEL control. Check that the triggering is stable.

6.6.6 NORM GAIN adjustment

Set the A SWEEP TIME/DIV value to 1 ms/div. Supply an 1-ms time marker signal. Adjust NORM GAIN adjustment R912 so that the time markers exactly align the vertical graticules.

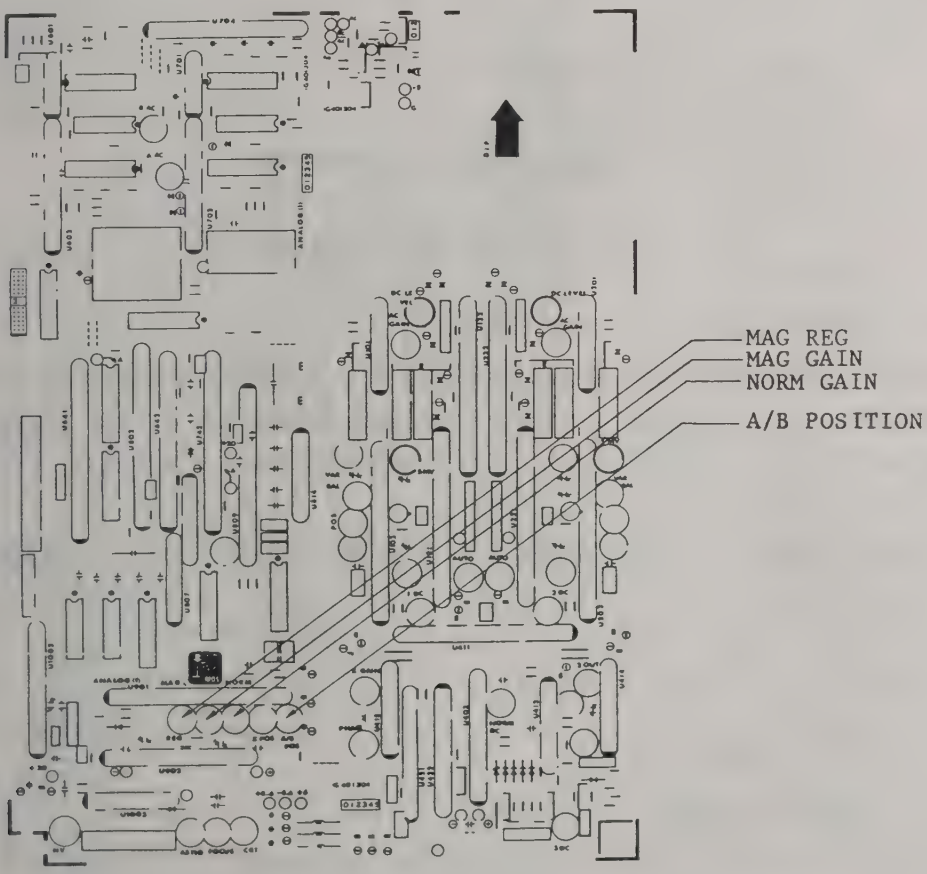

Fig. 6-21 ANALOG-1 board

6.6.7 MAG GAIN (See Fig. 6-21.)

Supply a 0.1-ms time marker signal with the setting of 6.6.6. Press the x10 MAG key. Adjust MAG GAIN adjustment R913 so that the time markers exactly align the vertical graticules.

6.6.8 MAG REG (See Fig. 6-21.)

Position a time marker signal exactly on the central vertical graticule under the settings of 6.6.7 with the horizontal POSITION control. Turn the x10 MAG key off. If the time marker is shifted from the center as shown in Fig. 6-22, adjust the position on the central vertical graticule with MAG REG adjustment R914. Repeat the adjustment several times until the time marker is not shifted when the key is turned on or off.

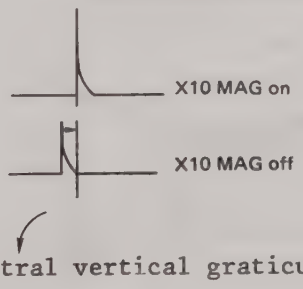

Fig. 6-22 MAG REG adjustment

6.6.9 A SWEEP TIME

Supply the time marker signal and set the A SWEEP TIME/DIV as described in the Table below. Adjust corresponding adjustment for within the specified deviation from the vertical graticules (see Figs. 6-21 and 6-23).

A SWEEP TIME	Time marker	Deviation	Adjustment
10 µs/div	10 µs	0 %	C803
50 ns/div	50 ns	+1.0%	C801
5 ns	5 ns	0%	5 ns-1
		(as much as possible)	5 ns-2

6.6.10 B SWEEP TIME GAIN

Set the B SWEEP TIME/DIV to 1 ms/div and supply an 1-ms time marker signal. Adjust B SWEEP TIME GAIN adjustment C941 so that the time markers exactly align the vertical graticules. (See Fig. 6-22.)

6.6.11 B SWEEP TIME

Supply the time marker signal and set the B SWEEP TIME/DIV as described in the Table below. Adjust corresponding adjustment for within the specified deviation from the vertical graticules (see Fig. 6-23).

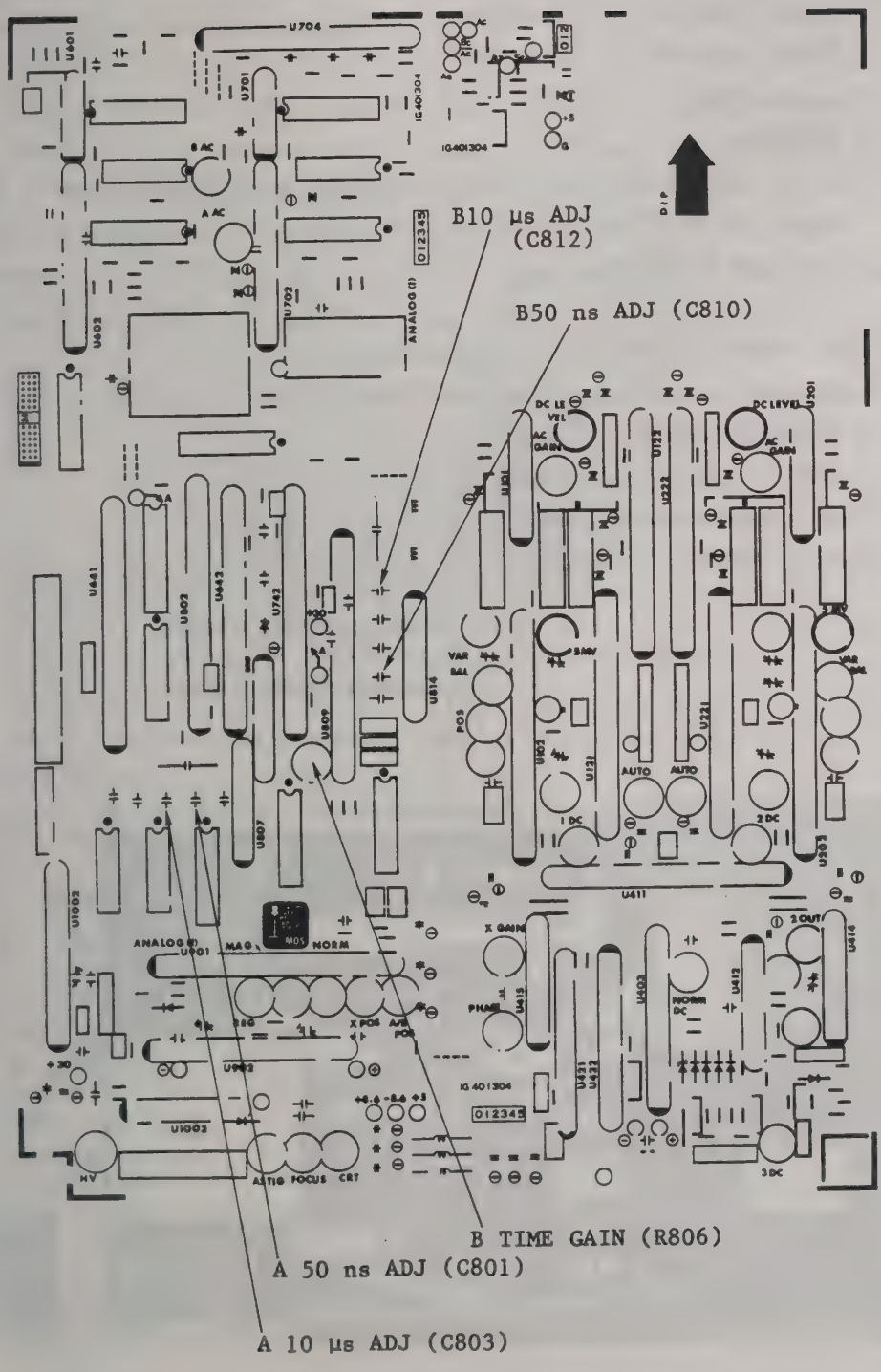

Fig. 6-23 ANALOG-1 board

6.6.12 A/B POSITION

Set sweep time coefficients and key switches as follows:

A SWEEP TIME/DIV: 1 ms/div
B SWEEP TIME/DIV: 10 µs/div
Display MODE: ALT
B FREERUN: ON

Set the A sweep start point on the graticule at the far left of the screen. Adjust A/B POSITION adjustment R903 so that the B sweep start point will be on the same graticule.

6.6.13 DELAY START and DELAY STOP adjustments

Set sweep time coefficients, key and input signal as follows:

A SWEEP TIME/DIV: 1 ms/div
B SWEEP TIME/DIV: 10 µs/div
Time marker signal: 1 ms
Display MODE: ALT

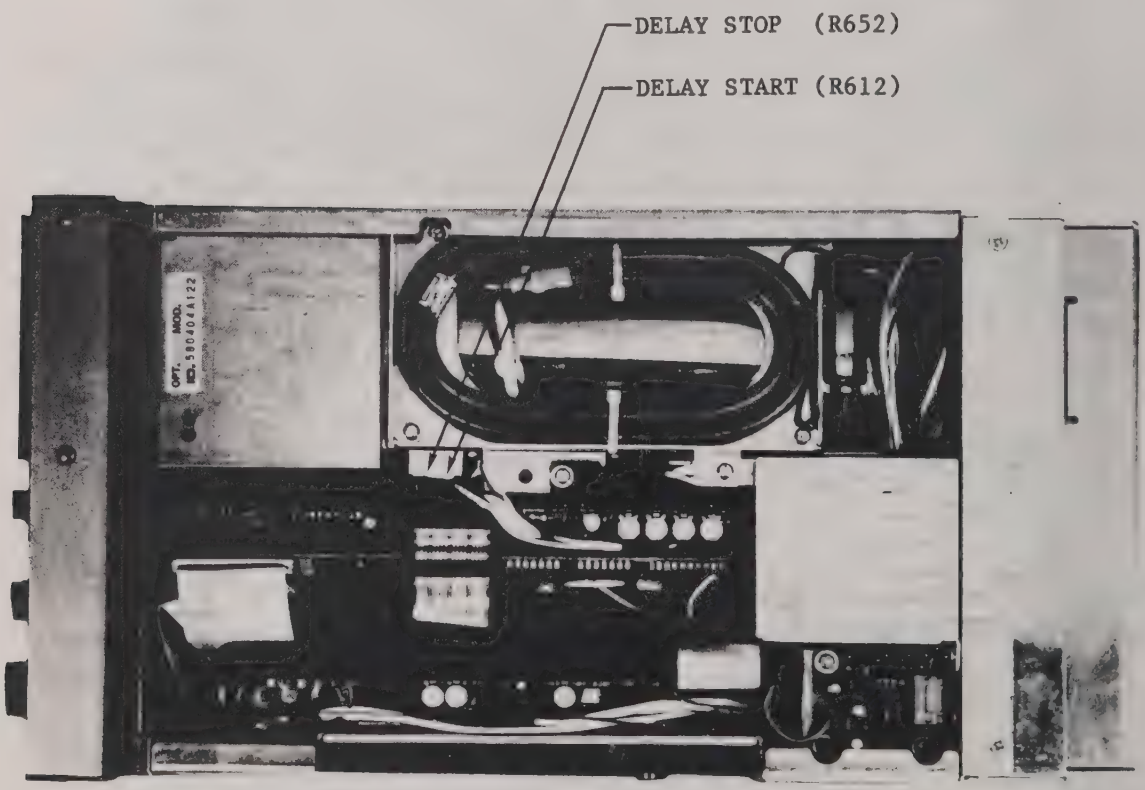

Fig. 6-24 DELAY START/STOP adjustment positions

(1) Operate the DELAY TIME lever to set the delay time coefficient to 100. Adjust DELAY START adjustment R612 so that the trace bright portion is shared equally from the second time marker.

(2) Operate the DELAY TIME lever to set the delay time coefficient to 900. Adjust DELAY STOP adjustment R652 so that the trace bright portion is shared equally from the tenth time marker.

(3) Repeat the above procedures several times until both the start and stop positions align with the second and tenth markers, respectively, as shown in

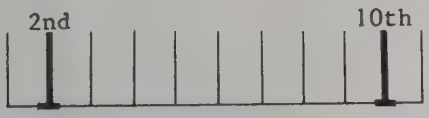

Fig. 6-25 Delay start and stop adjustments

Note: After the above adjustments, check that the delay time coefficient may be changed all the way from 030 through 999.

6.7 X-Y OPERATION ADJUSTMENT

6.7.1 X POSITION CENTER

Turn on the X-Y key and select the DC of the trigger COUPLING. Align the sweep start point on the graticule at the far left of the screen. Adjust X POSITION adjustment R906 so that the trace is positioned on the central graticule.

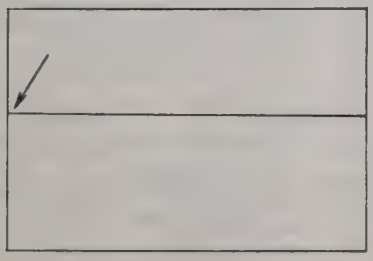

Fig. 6-26 Aligning the sweep start point

6.7.2 X GAIN

Change the CH1 input signal to 5 mV/div and supply a 20-mV square-wave (from the calibrator). Adjust X GAIN adjustment R425 for a 4-div sweep.

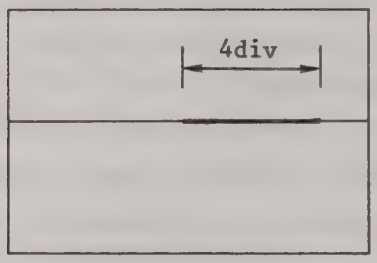

Fig. 6-27 X GAIN adjustment

6.7.3 X-Y PHASE

Supply the same 1-MHz, 4-div sinewave signals both to X (CH1) and Y (CH2) axes. Adjust X-Y PHASE adjustment R417 for 0 phase difference.

Note: Repeat the above procedures two or three times until the optimum conditions will be obtained.

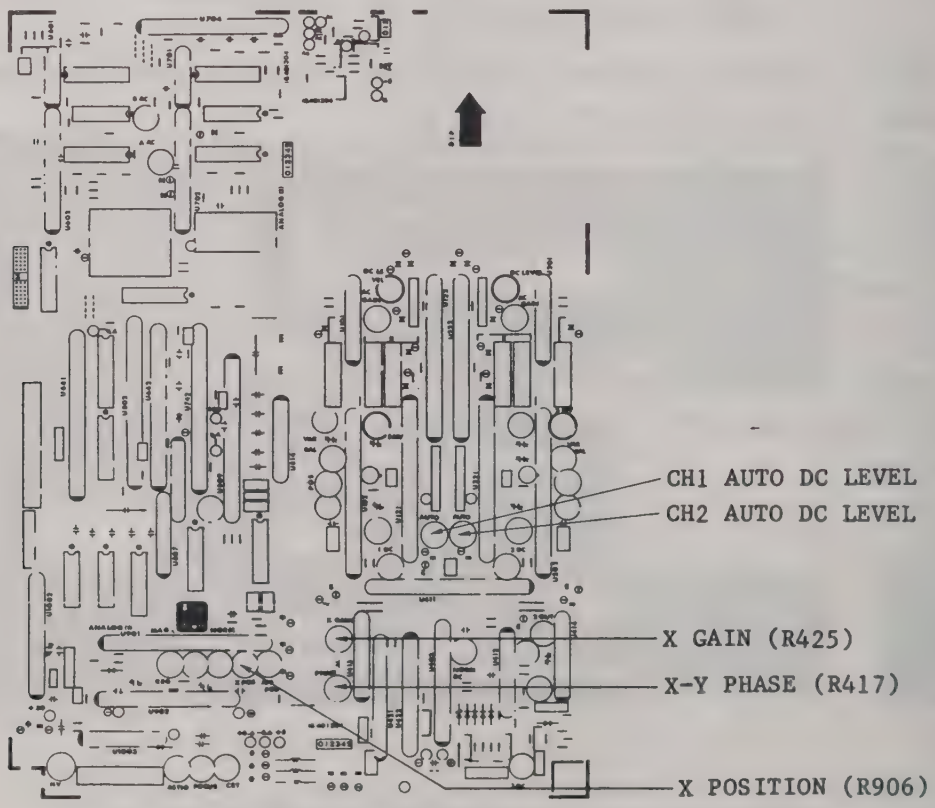

Fig. 6-28 ANALOG-1 board

6.8 DIGITAL DISPLAY

6.8.1 Vertical gain and position adjustments

Adjust GAIN and POSITION adjustments R1566 and R1539 on the CHARACTER board so that digital displays of CH1 and CH2 volts/div, sweep time coefficients and delay time are positioned as shown in Fig. 6-29.

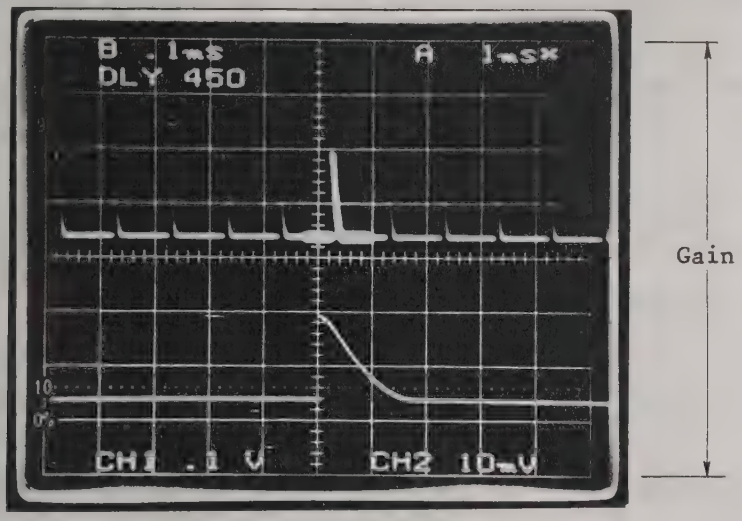

Fig. 6-29 Vertical adjustment of digital display

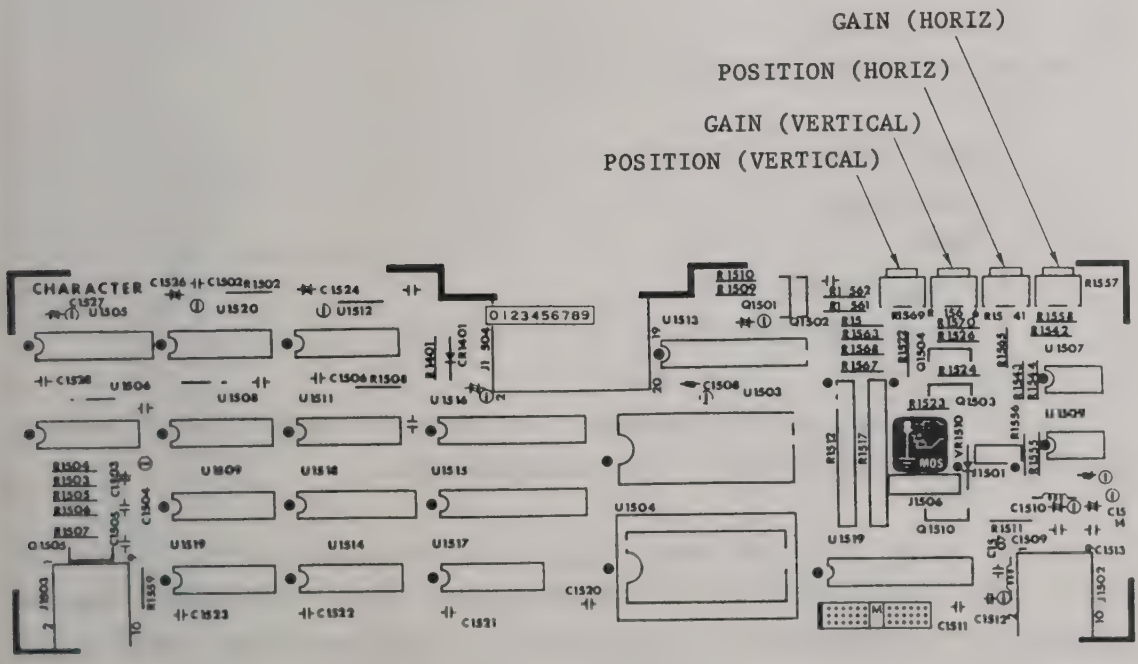

Fig. 6-30 CHARACTER board

6.8.2 Horizontal gain and position adjustments

Adjust GAIN and POSITION adjustments R1557 and R1541 on the CHARACTER board so that digital displays are positioned as shown in Fig. 6-31.

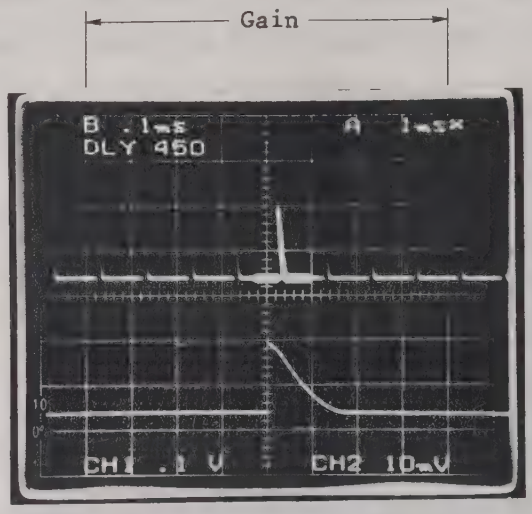

Fig. 6-31 Horizontal adjustment of digital display

6.9 AUTO RANG ADJUSTMENT

6.9.1 CH1 auto range

Set the front panel settings as follows:

A SWEEP MODE:	AUTO
Display mode:	A
V MODE:	CH1
A trigger SOURCE:	CH1
A trigger COUPLING:	CH1
CH1 volts/div:	5 mV/div

Supply a 50-kHz, 40 mV sinewave. Set the auto range DC level control (see Fig. 5-28, ANALOG-1 board) at the mid-position.

Set the orange VERT AUTO RANGE dial on the side panel to "3". Connect an oscilloscope with the CH1 AUTO RANGE check point via a 10:1 probe. Set the volts/div of that oscilloscope to 0.1 v/div. Supply a 50-kHz, 50-mV signal to the CH1 INPUT connector.

Gradually reduce the voltage of input signal and adjust AUTO RANGE adjustment of the PANEL-3 board so that the signal state measured at the check point goes from Low (0 V) to High (5 V) when the amplitude on the VP-5610P screen is 8 div ±1 div.

Change the VERT AUTO RANGE dial setting to "2". Check that the signal state change occurs when the amplitude is 6 div ±1.5 div.

Change the VERT AUTO RANGE dial setting to "1". Check that the signal state change occurs when the amplitude is 4 div ±1.5 div.

Supply a 50-kHz, 5 Vp-p signal to the CH1 connector via the standard probe VQ-057Y21. Shift the orange probe switch from x10 to REF position and the other way around. Check that pressing the AUTO RANGE key causes stable auto ranging operations. For the ANALOG-1 board position in the VP-5610P and AUTO RANGE adjustments locations, see Fig. 6-32 on the next page.

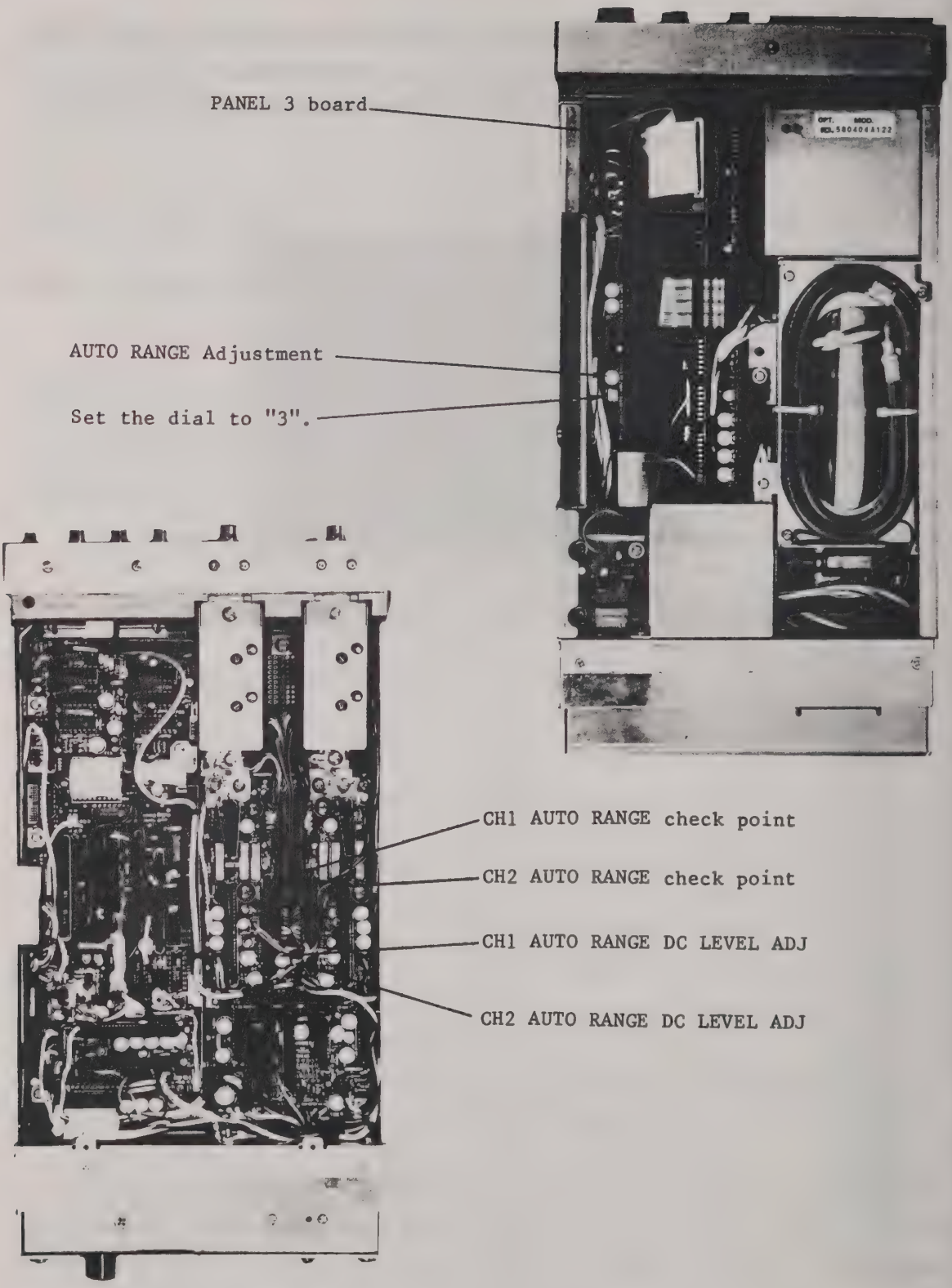

Fig. 6-32 Part of ANALOG-1 board and AUTO RANGE adjustments

6.9.2 CH2 auto range

Set the front panel settings as follows:

A SWEEP MODE:	AUTO
Display mode:	A
V MODE:	CH2
A trigger SOURCE:	CH2
A trigger COUPLING:	CH2
CH2 volts/div:	5 mV/div

Perform the same adjustments required for CH1 auto range, but using CH2 AUTO RANGE DC LEVEL adjustment and check point. For CH2, only check the signal transition point when the HORIZ AUTO RANGE setting is "3". Check that the amplitude difference between CH1 and CH2 at the signal transition point is less than 0.5 div.

Perform the auto range operation check with the standard probe VQ-057Y21 connected to the CH2 connector in the same manner as the procedure for CH1.

6.9.3 Horizontal AUTO RANGE operation check

Set the orange HORIZ AUTO RANGE dial on the side panel to "1". Supply a 50-kHz sinewave to the VP-5610P and press the AUTO RANGE key. Check that the A sweep will be 5 µs/div. (Note that this is only the reference and does not necessarily apply for all waveforms.)

Change the HORIZ AUTO RANGE dial setting to "2" through "9" observing the trace at the each setting. Check that the A sweep changes between 5 µs/div and 50 µs/div (when the dial set to "8" or "9").

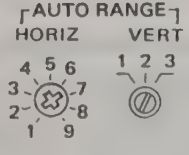

Fig. 6-33 Appearance of AUTO RANGE dials

6.10 SOFTWARE CHECK

6.10.1 Initial setting when power is turned on

Turn the power supply on pressing CH1 and CH2 GND keys simultaneously. Check that the display shown in Fig. 6-34 as the initial setting display will appear after a while. The trace position varies depend on the POSITION control position.

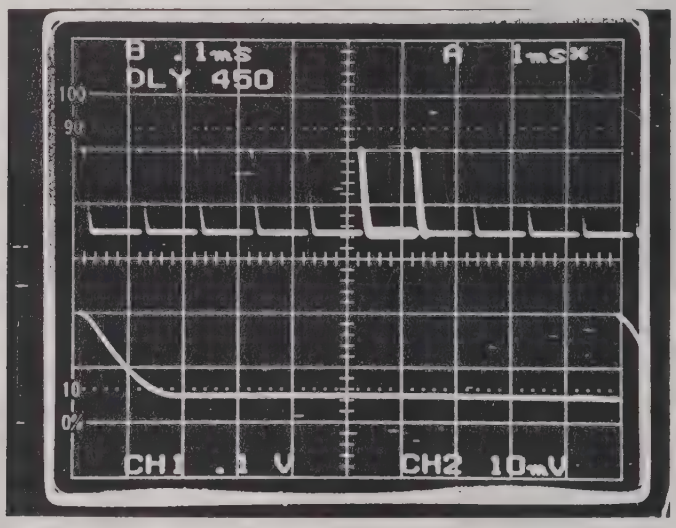

Fig. 6-34 Initial setting display

6.10.2 Battery backup

Turn the power supply off. Then, press the POWER switch after at least 0.5 second. Check that all front panel settings identical to those prior to turning power off are reproduced.

6.10.3 Setting for delivery

In the plant, initialization of front panel settings is conducted before delivery by turning power on simultaneously pressing CH1 and CH2 GND keys. It is recommended for Service Stations to do the same.

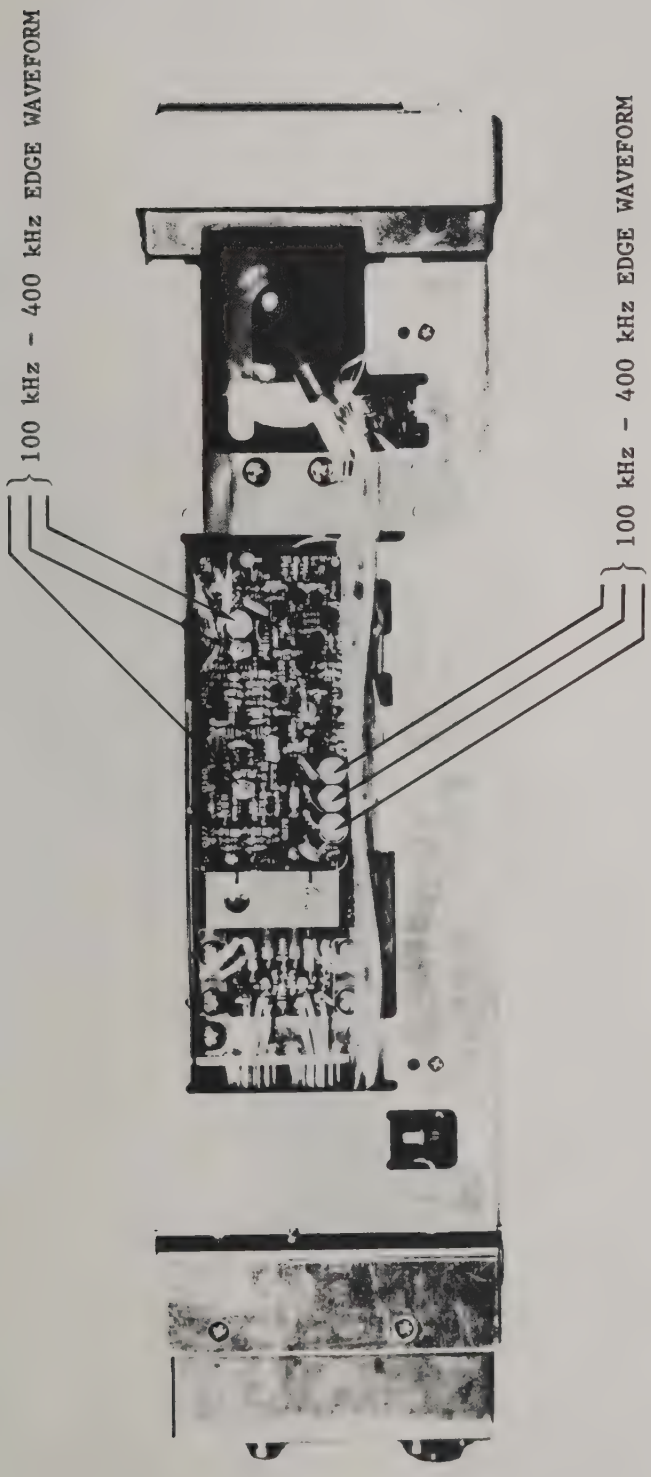
100 kHz - 400 kHz EDGE WAVEFORM
100 kHz - 400 kHz EDGE WAVEFORM

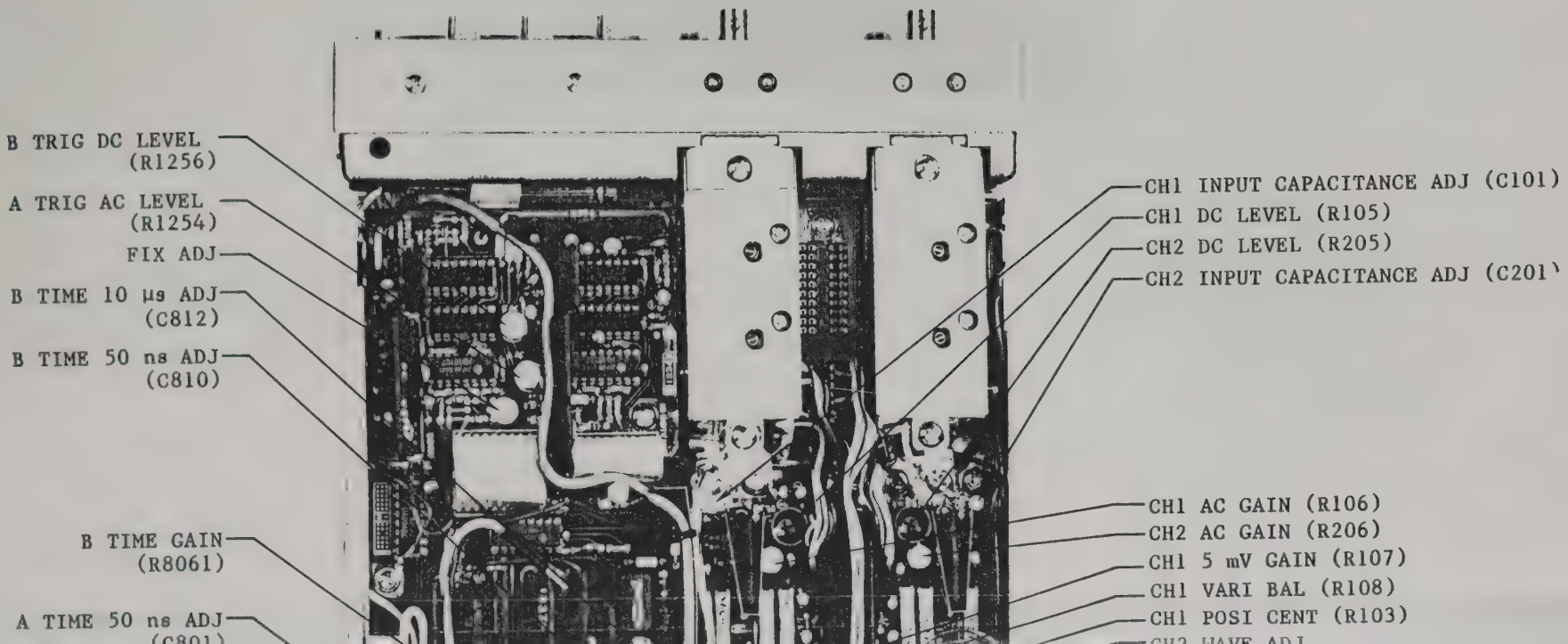
B TRIG DC LEVEL (R1256)
A TRIG AC LEVEL (R1254)
FIX ADJ
B TIME 10 µs ADJ (C812)
B TIME 50 ns ADJ (C810)
B TIME GAIN (R8061)
A TIME 50 ns ADJ
CH1 INPUT CAPACITANCE ADJ (C101)
CH1 DC LEVEL (R105)
CH2 DC LEVEL (R205)
CH2 INPUT CAPACITANCE ADJ (C201)
CH1 AC GAIN (R106)
CH2 AC GAIN (R206)
CH1 5 mV GAIN (R107)
CH1 VARI BAL (R108)
CH1 POSI CENT (R103)

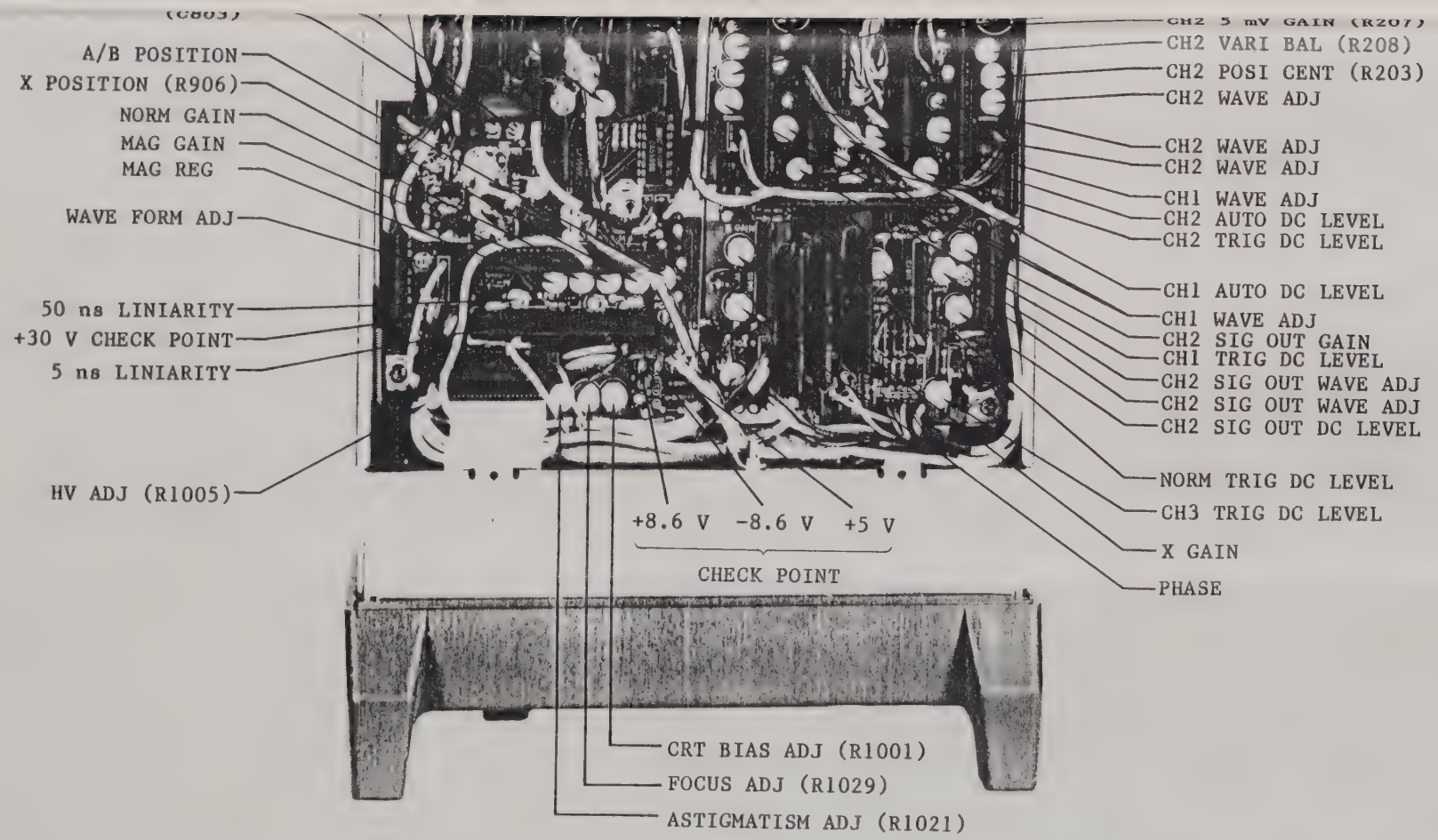
(C803)
A/B POSITION
X POSITION (R906)
NORM GAIN
MAG GAIN
MAG REG
WAVE FORM ADJ
50 ns LINIARITY
+30 V CHECK POINT
5 ns LINIARITY
HV ADJ (R1005)
CH2 5 mV GAIN (R207)
CH2 VARI BAL (R208)
CH2 POSI CENT (R203)
CH2 WAVE ADJ
CH2 WAVE ADJ
CH2 WAVE ADJ
CH1 WAVE ADJ
CH2 AUTO DC LEVEL
CH2 TRIG DC LEVEL
CH1 AUTO DC LEVEL
CH1 WAVE ADJ
CH2 SIG OUT GAIN
CH1 TRIG DC LEVEL
CH2 SIG OUT WAVE ADJ
CH2 SIG OUT WAVE ADJ
CH2 SIG OUT DC LEVEL
NORM TRIG DC LEVEL
CH3 TRIG DC LEVEL
X GAIN
PHASE
+8.6 V
-8.6 V
+5 V
CHECK POINT
CRT BIAS ADJ (R1001)
FOCUS ADJ (R1029)
ASTIGMATISM ADJ (R1021)

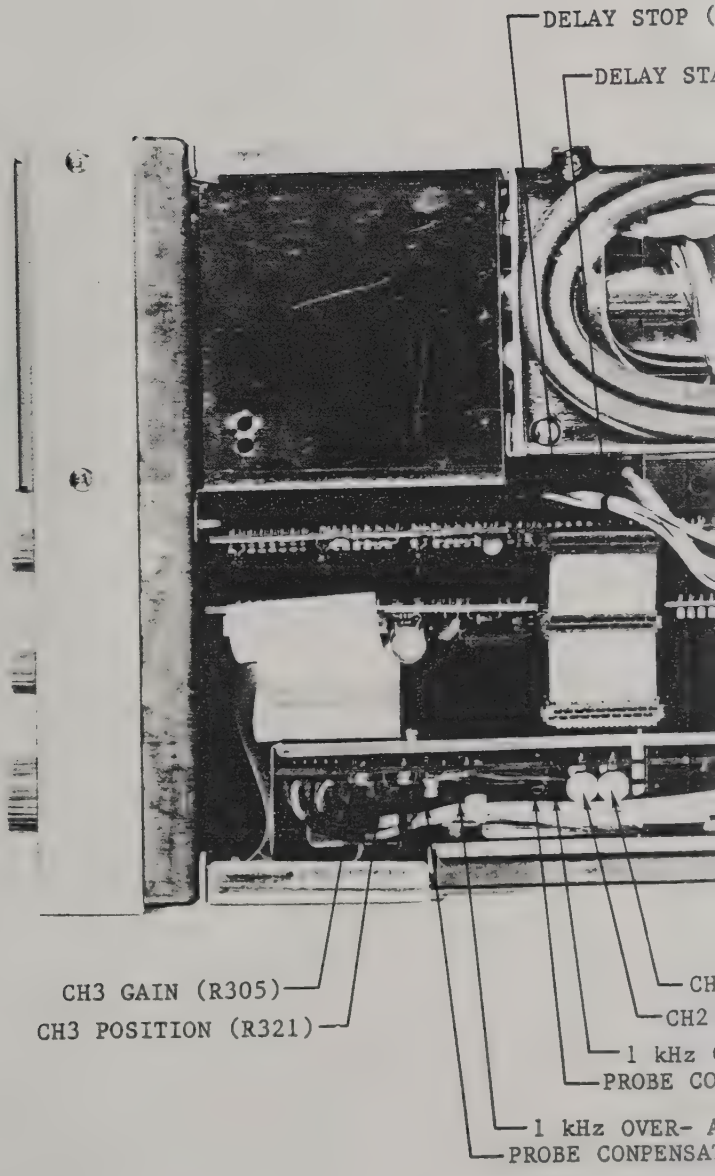
DELAY STOP (
DELAY STA
CH3 GAIN (R305)
CH3 POSITION (R321)
CH
CH2
1 kHz
PROBE CO
1 kHz OVER- A
PROBE CONPENSA

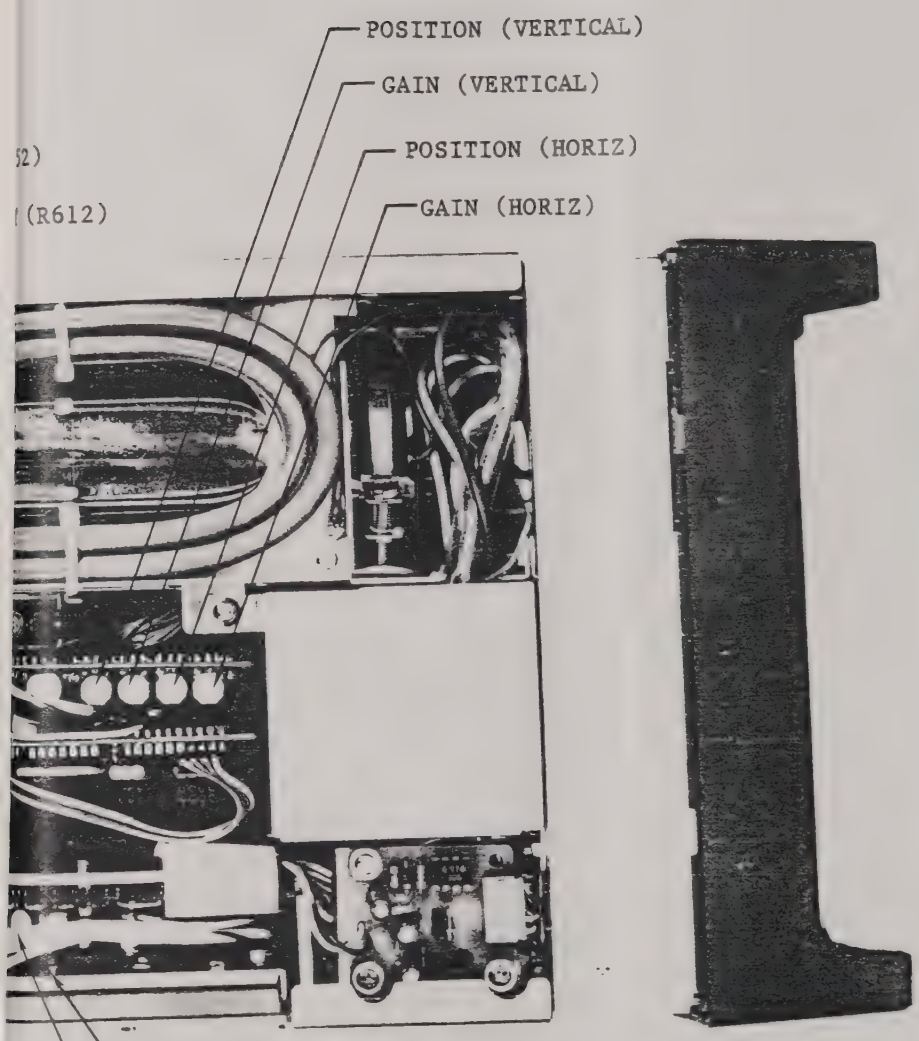

52)

(R612)

VARIABLE (R112)

ARIABLE (R212)

ER- AND UNDER-SHOOT ADJ } 0.5 V RANGE
PENSATION

D UNDER-SHOOT ADJ } 0.1 V RANGE
ION

PARTS LIST

.	4G205544	P5610A INPUT ATT	7-1
.	4G205545	P5610A V MAIN	7-5
.	4G205546	P5610A ANALOG-1	7-9
.	4G205547	P5610A ANALOG-2	7-20
.	4G205548	P5610A PANEL-3	7-22
.	4G205549	P5610A CHARACTER	7-25
.	4G205550	P5610A CPU BOARD	7-28
.	4G205551	P5610A PANEL-1	7-30
.	4G205552	P5610A PANEL-2	7-32
.	4G205553	P5610A MAIN FRAME 1	7-34
.	4G205554	P5610A POWER ASSY	7-36
.	4G205555	P5610A CRT CONTROL	7-39
.	4G205556	P5610A HV ASSY	7-40
.	4G205557	P5610A CABLE ACCESSORY	7-41
.	4G304249-1	P5610A01 PACKAGE	7-41
.	4G304338	P5610A MECHA:MAIN FRAME	7-42
.	4G304339	P5610A MECHA:MAIN PANEL	7-44
.	4G304340	P5610A MECHA:SIDE PANEL	7-46
.	4G304341	P5610A MECHA:HV ASSY	7-46
.	4G304342	P5610A MECHA:ESCUTCHEON	7-47
.	4G304343	P5610A MECHA:ATTEN ASSY	7-47
.	4G304344	P5610A MECHA:COVER ASSY	7-47
.	4G304345	P5610A MECHA:PWR UNIT-AC	7-48
.	4G304346	Q035J20 RECTANGULAR HOOD	7-48
.	4G304347	Q039G20 COVER,FRONT	7-48

P5610A INPUT ATT DWG NO 4G205544

EF NO	QTY	PART NO	DESCRIPTION	
	28	4G617490-0AB		
10	1	ECCF1H180KC	C:FXD CER TC	18PF +-10% 50V NPO
11	1	84C02	P5530B C.FXD FLM	0.047UF 500V
12	1	ECUM1H102JCM	C:FXD CHIP	1000 PF +-5% 50V NP0
13	1	ECV1ZW10X53T	C:VAR CER	10PF
14	1	ECV1ZW04X53T	C:VAR CER	4PF
15	1	ECUM1H221JCM	C:FXD CHIP	220PF +-5% 50V NPO
16	1	ECV1ZW10X53T	C:VAR CER	10PF
17	1	ECV1ZW04X53T	C:VAR CER	4PF
18	1	ECUM1H220JCM	C:FXD CHIP	22PF +-5% 50V NP0
40	1	ECCF1H180KC	C:FXD CER TC	18PF +-10% 50V NPO
41	1	84C02	P5530B C.FXD FLM	0.047UF 500V
42	1	ECUM1H102JCM	C:FXD CHIP	1000 PF +-5% 50V NP0
43	1	ECV1ZW10X53T	C:VAR CER	10PF
44	1	ECV1ZW04X53T	C:VAR CER	4PF
45	1	ECUM1H221JCM	C:FXD CHIP	220PF +-5% 50V NPO
46	1	ECV1ZW10X53T	C:VAR CER	10PF
47	1	ECV1ZW04X53T	C:VAR CER	4PF
48	1	ECUM1H220JCM	C:FXD CHIP	22PF +-5% 50V NP0
61	1	ECEA1CKS100E	C:FXD AL ELECT	10UF +-20% 16V
62	1	ECEA1CKS100E	C:FXD AL ELECT	10UF +-20% 16V
71	1	ECKD2H102MD	C:FXD CER HI-K	1000PF +-20% 500V
72	1	ECKD2H102MD	C:FXD CER HI-K	1000PF +-20% 500V
73	1	ECKD2H102MD	C:FXD CER HI-K	1000PF +-20% 500V
74	1	ECKD2H102MD	C:FXD CER HI-K	1000PF +-20% 500V
91	1	ECEA1CKS100E	C:FXD AL ELECT	10UF +-20% 16V
92	1	ECEA1CKS100E	C:FXD AL ELECT	10UF +-20% 16V
R 11	1	1SS181	DIODE:SI	30MA UHF MIXER
R 12	1	1SS181	DIODE:SI	30MA UHF MIXER
R 13	1	1SS181	DIODE:SI	30MA UHF MIXER
R 14	1	1SS181	DIODE:SI	30MA UHF MIXER
R 15	1	1SS181	DIODE:SI	30MA UHF MIXER
R 16	1	1SS181	DIODE:SI	30MA UHF MIXER
R 41	1	1SS181	DIODE:SI	30MA UHF MIXER
R 42	1	1SS181	DIODE:SI	30MA UHF MIXER
R 43	1	1SS181	DIODE:SI	30MA UHF MIXER
R 44	1	1SS181	DIODE:SI	30MA UHF MIXER
R 45	1	1SS181	DIODE:SI	30MA UHF MIXER
R 46	1	1SS181	DIODE:SI	30MA UHF MIXER
		4G401293-2	P5610A ATT2 PC BOARD	
		4G401294-2	P5610A ATT1 PC BOARD	

P5610A INPUT ATT DWG NO 4G205544

REF	NO	QTY	PART NO	DESCRIPTION	
J	11	1	84J08	CONNECTOR	BNC154
J	41	1	84J08	CONNECTOR	BNC154
K	11	1	84S10	P5610A REED SW	200V 0.5A
K	12	1	S-105TP	REED RELAY	5V 31.3MA
K	13	1	84S10	P5610A REED SW	200V 0.5A
K	14	1	84S10	P5610A REED SW	200V 0.5A
K	15	1	84S10	P5610A REED SW	200V 0.5A
K	16	1	84S10	P5610A REED SW	200V 0.5A
K	17	1	84S10	P5610A REED SW	200V 0.5A
K	18	1	84S10	P5610A REED SW	200V 0.5A
K	41	1	84S10	P5610A REED SW	200V 0.5A
K	42	1	S-105TP	REED RELAY	5V 31.3MA
K	43	1	84S10	P5610A REED SW	200V 0.5A
K	44	1	84S10	P5610A REED SW	200V 0.5A
K	45	1	84S10	P5610A REED SW	200V 0.5A
K	46	1	84S10	P5610A REED SW	200V 0.5A
K	47	1	84S10	P5610A REED SW	200V 0.5A
K	48	1	84S10	P5610A REED SW	200V 0.5A
L	11	1	84L10	P5610A COIL:ATTEN	0.07 3UEW 1300TX2
L	13	1	84L10	P5610A COIL:ATTEN	0.07 3UEW 1300TX2
L	14	1	84L10	P5610A COIL:ATTEN	0.07 3UEW 1300TX2
L	15	1	84L10	P5610A COIL:ATTEN	0.07 3UEW 1300TX2
L	16	1	84L10	P5610A COIL:ATTEN	0.07 3UEW 1300TX2
L	17	1	84L10	P5610A COIL:ATTEN	0.07 3UEW 1300TX2
L	18	1	84L10	P5610A COIL:ATTEN	0.07 3UEW 1300TX2
L	41	1	84L10	P5610A COIL:ATTEN	0.07 3UEW 1300TX2
L	43	1	84L10	P5610A COIL:ATTEN	0.07 3UEW 1300TX2
L	44	1	84L10	P5610A COIL:ATTEN	0.07 3UEW 1300TX2
L	45	1	84L10	P5610A COIL:ATTEN	0.07 3UEW 1300TX2
L	46	1	84L10	P5610A COIL:ATTEN	0.07 3UEW 1300TX2
L	47	1	84L10	P5610A COIL:ATTEN	0.07 3UEW 1300TX2
L	48	1	84L10	P5610A COIL:ATTEN	0.07 3UEW 1300TX2
MP	351	1	4G617629-2CB	P5610A SHIELD:ATTEN PCB	
MP	352	1	4G617629-2CB	P5610A SHIELD:ATTEN PCB	
Q	61	1	2SC2712BL	TSTR:SI PNP	150MW FT:80MHZ
Q	62	1	2SC2712BL	TSTR:SI PNP	150MW FT:80MHZ
Q	63	1	2SC2712BL	TSTR:SI PNP	150MW FT:80MHZ
Q	64	1	2SC2712BL	TSTR:SI PNP	150MW FT:80MHZ
Q	65	1	2SC2712BL	TSTR:SI PNP	150MW FT:80MHZ
Q	66	1	2SC2712BL	TSTR:SI PNP	150MW FT:80MHZ
Q	67	1	2SC2712BL	TSTR:SI PNP	150MW FT:80MHZ

P5610A INPUT ATT DWG NO 4G205544

EF NO	QTY	PART NO	DESCRIPTION	
68	1	2SC2712BL	TSTR:SI PNP	150MW FT:80MHZ
91	1	2SC2712BL	TSTR:SI PNP	150MW FT:80MHZ
92	1	2SC2712BL	TSTR:SI PNP	150MW FT:80MHZ
93	1	2SC2712BL	TSTR:SI PNP	150MW FT:80MHZ
94	1	2SC2712BL	TSTR:SI PNP	150MW FT:80MHZ
95	1	2SC2712BL	TSTR:SI PNP	150MW FT:80MHZ
96	1	2SC2712BL	TSTR:SI PNP	150MW FT:80MHZ
97	1	2SC2712BL	TSTR:SI PNP	150MW FT:80MHZ
98	1	2SC2712BL	TSTR:SI PNP	150MW FT:80MHZ
11	1	ERD25TJ330V	R:FXD CARBON	33 OHM 5% 1/4W
11	1	ERJ8GCJ4R7M	R:FXD CHIP CARBON	4.7 OHM 5% 1/8W
14	1	ERJ8GCJ220M	R:FXD CHIP CARBON	22 OHM 5% 1/8W
15	1	ERO50CKF9903	R:FXD MET FLM	990K OHM 1% 1/2W
16	1	ERO25CKF1012	R:FXD MET FLM	10.1K OHM 1% 1/4W
18	1	ERJ8GCJ221M	R:FXD CHIP CARBON	220 OHM 5% 1/8W
19	1	ERJ8GCJ220M	R:FXD CHIP CARBON	22 OHM 5% 1/8W
20	1	ERO50CKF9003	R:FXD MET FLM	900K OHM 1% 1/2W
21	1	ERO25CKF1113	R:FXD MET FLM	111K OHM 1% 1/4W
22	1	ERJ8GCJ620M	R:FXD CHIP	62 OHM 5% 1/8W
23	1	ERJ8GCJ470M	R:FXD CHIP CARBON	47 OHM 5% 1/8W
25	1	ERD25TJ121V	R:FXD CARBON	120 OHM 5% 1/4W
41	1	ERD25TJ330V	R:FXD CARBON	33 OHM 5% 1/4W
41	1	ERJ8GCJ4R7M	R:FXD CHIP CARBON	4.7 OHM 5% 1/8W
44	1	ERJ8GCJ220M	R:FXD CHIP CARBON	22 OHM 5% 1/8W
45	1	ERO50CKF9903	R:FXD MET FLM	990K OHM 1% 1/2W
46	1	ERO25CKF1012	R:FXD MET FLM	10.1K OHM 1% 1/4W
48	1	ERJ8GCJ221M	R:FXD CHIP CARBON	220 OHM 5% 1/8W
49	1	ERJ8GCJ220M	R:FXD CHIP CARBON	22 OHM 5% 1/8W
50	1	ERO50CKF9003	R:FXD MET FLM	900K OHM 1% 1/2W
51	1	ERO25CKF1113	R:FXD MET FLM	111K OHM 1% 1/4W
52	1	ERJ8GCJ620M	R:FXD CHIP	62 OHM 5% 1/8W
53	1	ERJ8GCJ470M	R:FXD CHIP CARBON	47 OHM 5% 1/8W
55	1	ERD25TJ121V	R:FXD CARBON	120 OHM 5% 1/4W
061	1	ERJ8GCJ103M	R:FXD CHIP CARBON	10K OHM 5% 1/8W
62	1	ERJ8GCJ103M	R:FXD CHIP CARBON	10K OHM 5% 1/8W
63	1	ERJ8GCJ103M	R:FXD CHIP CARBON	10K OHM 5% 1/8W
064	1	ERJ8GCJ103M	R:FXD CHIP CARBON	10K OHM 5% 1/8W
65	1	ERJ8GCJ103M	R:FXD CHIP CARBON	10K OHM 5% 1/8W
66	1	ERJ8GCJ103M	R:FXD CHIP CARBON	10K OHM 5% 1/8W
71	1	ERJ8GCJ203M	R:FXD CHIP	20K OHM 5%
72	1	ERJ8GCJ203M	R:FXD CHIP	20K OHM 5%
73	1	ERJ8GCJ203M	R:FXD CHIP	20K OHM 5%
74	1	ERJ8GCJ203M	R:FXD CHIP	20K OHM 5%
75	1	ERJ8GCJ110M	R:FXD CHIP	11 OHM 5%

P5610A INPUT ATT DWG NO 4G205544

REF NO	QTY	PART NO	DESCRIPTION	
R 76	1	ERJ8GCJ110M	R:FXD CHIP	11 OHM 5%
R 091	1	ERJ8GCJ103M	R:FXD CHIP CARBON	10K OHM 5% 1/8W
R 92	1	ERJ8GCJ103M	R:FXD CHIP CARBON	10K OHM 5% 1/8W
R 93	1	ERJ8GCJ103M	R:FXD CHIP CARBON	10K OHM 5% 1/8W
R 094	1	ERJ8GCJ103M	R:FXD CHIP CARBON	10K OHM 5% 1/8W
R 95	1	ERJ8GCJ103M	R:FXD CHIP CARBON	10K OHM 5% 1/8W
R 96	1	ERJ8GCJ103M	R:FXD CHIP CARBON	10K OHM 5% 1/8W
R 101	1	ERJ8GCJ103M	R:FXD CHIP CARBON	10K OHM 5% 1/8W
R 102	1	ERJ8GCJ103M	R:FXD CHIP CARBON	10K OHM 5% 1/8W
R 103	1	ERJ8GCJ103M	R:FXD CHIP CARBON	10K OHM 5% 1/8W
R 104	1	ERJ8GCJ103M	R:FXD CHIP CARBON	10K OHM 5% 1/8W
RT 25	1	ERTD2FGL750S	THERMISTOR	75 OHM 15%
RT 55	1	ERTD2FGL750S	THERMISTOR	75 OHM 15%

P5610A V MAIN DWG NO 4G205545

REF NO	QTY	PART NO	DESCRIPTION	
505	1	ECQM1H472KZ	C:FXD FLM	4700PF 10% 50V
506	1	ECCF1H330KC	C:FXD CER TC	33PF +-10% 50V NPO
507	1	ECV1ZW20X53T	C:VAR CER	20PF
508	1	ECCW1H470KC5	C:FXD CER TC	47PF +-10% 50V NPO
510	1	ECCF1H330KC	C:FXD CER TC	33PF +-10% 50V NPO
567	1	ECV1ZW20X53T	C:VAR CER	20PF
568	1	ECCF1H560KC	C:FXD CER TC	56PF +-10% 50V NPO
569	1	ECCF1H121KC	C:FXD CER TC	120PF +-10% 50V NPO
570	1	ECQM1H682JZ	C:FXD FLM	6800PF 5% 50V
571	1	ECQM1H102KZ	C:FXD FLM	1000PF 10% 50V
572	1	ECEA1CKS100	C:FXD AL ELECT	16V 10UF
574	1	ECKF1H103ZF	C:FXD CER HI-K	10000PF +80-20% 50V
576	1	ECCW1H471K5	C:FXD CER TC	470PF +-10% 50V SL
594	1	ECEA1CKS100	C:FXD AL ELECT	16V 10UF
595	1	ECCF1H820KC	C:FXD CER TC	82PF +-10% 50V NPO
596	1	ECCF1H820KC	C:FXD CER TC	82PF +-10% 50V NPO
597	1	ECEA1CKS100	C:FXD AL ELECT	16V 10UF
598	1	ECEA1CKS100	C:FXD AL ELECT	16V 10UF
599	1	ECEA1CKS100	C:FXD AL ELECT	16V 10UF
602	1	ECCF1H330KC	C:FXD CER TC	33PF +-10% 50V NPO
603	1	ECCF1H330KC	C:FXD CER TC	33PF +-10% 50V NPO
604	1	ECKD1H102MB2	C:FXD CER HI-K	1000PF +-20% 50V
605	1	ECKD1H102MB2	C:FXD CER HI-K	1000PF +-20% 50V
606	1	ECCF1H180KC	C:FXD CER TC	18PF +-10% 50V NPO
518	1	1SS184	DIODE:SI	30MA UHF MIXER
595	1	1SS226	DIODE:SI	30MA
596	1	1SS226	DIODE:SI	30MA
	1	65039-032	CONNECTOR	LATCH HOUSING 5P
579	1	4G431289	P5511A COIL	PEAKING
580	1	4G431289	P5511A COIL	PEAKING
591	1	4G431289	P5511A COIL	PEAKING
592	1	4G431289	P5511A COIL	PEAKING
593	1	4G431376	P5610A COIL HF	8T
594	1	4G431376	P5610A COIL HF	8T
595	1	ERC14GJ101	R:FXD COMP	100 OHM 5% 1/4W
596	1	ERC14GJ101	R:FXD COMP	100 OHM 5% 1/4W
361	1	4G617492-1BB	P5610A HEAT SINK:V-OUT	
362	1	4G670017-2DB	P5511A HEAT SINK	
363	1	R9D	HEAT SINK	
364	1	R9D	HEAT SINK	
501	1	2SC2026	TSTR:SI NPN	PC:250MW FT:2000MHZ
502	1	2SC2026	TSTR:SI NPN	PC:250MW FT:2000MHZ

P5610A V MAIN DWG NO 4G205545

REF NO	QTY	PART NO	DESCRIPTION	
Q 512	1	2SC828A-RS	TSTR:SI NPN	PC:250MW FT:220MHZ
Q 516	1	2SC828A-RS	TSTR:SI NPN	PC:250MW FT:220MHZ
Q 520	1	2SC1359-C	TSTR:SI NPN	PC:250MW FT:300MHZ
Q 522	1	2SC828A-RS	TSTR:SI NPN	PC:250MW FT:220MHZ
Q 526	1	2SC828A-RS	TSTR:SI NPN	PC:250MW FT:220MHZ
Q 527	1	2SA564A-PQ	TSTR:SI PNP	PC:250MW FT:80MHZ
Q 530	1	2SA1206	TSTR:SI PNP	PC:600MW FT:1000MHZ
Q 531	1	2SA1206	TSTR:SI PNP	PC:600MW FT:1000MHZ
Q 535	1	2SA838TA	TSTR:SI PNP	PC:250MW FT:300MHZ
Q 539	1	2SA838TA	TSTR:SI PNP	PC:250MW FT:300MHZ
Q 544	1	2SA838TA	TSTR:SI PNP	PC:250MW FT:300MHZ
Q 545	1	2SA838TA	TSTR:SI PNP	PC:250MW FT:300MHZ
Q 560	1	2SC2026	TSTR:SI NPN	PC:250MW FT:2000MHZ
Q 561	1	2SC2026	TSTR:SI NPN	PC:250MW FT:2000MHZ
Q 577	1	2SA1206	TSTR:SI PNP	PC:600MW FT:1000MHZ
Q 578	1	2SA1206	TSTR:SI PNP	PC:600MW FT:1000MHZ
Q 579	1	2SC1252N	TSTR:SI NPN	PC:800MW FT:1700MHZ
Q 580	1	2SC1252N	TSTR:SI NPN	PC:800MW FT:1700MHZ
Q 587	1	2SC1252N	TSTR:SI NPN	PC:800MW FT:1700MHZ
Q 588	1	2SC1252N	TSTR:SI NPN	PC:800MW FT:1700MHZ
Q 595	1	2SA564A-PQ	TSTR:SI PNP	PC:250MW FT:80MHZ
R 500	1	ERD10TJ752	R:FXD CARBON	7.5K OHM 5% 1/8W
R 501	1	ERO25CKF90R9	R:FXD MET FLM	90.9 OHM 1% 1/4W
R 502	1	ERO25CKF90R9	R:FXD MET FLM	90.9 OHM 1% 1/4W
R 503	1	ERD10TJ100	R:FXD CARBON	10 OHM 5% 1/8W
R 504	1	ERD10TJ100	R:FXD CARBON	10 OHM 5% 1/8W
R 505	1	ERD25TJ620V	R:FXD CARBON	62 OHM 5% 1/4W
R 506	1	ERD10TJ361	R:FXD CARBON	360 OHM 5% 1/8W
R 507	1	ERO25CKF1581	R:FXD MET FLM	1.58K OHM 1% 1/4W
R 508	1	TM64K2PV2-12	R:VAR CERMET	100 OHM 20%
R 509	1	ERO25CKF1581	R:FXD MET FLM	1.58K OHM 1% 1/4W
R 510	1	ERD10TJ361	R:FXD CARBON	360 OHM 5% 1/8W
R 511	1	ERD10TJ101	R:FXD CARBON	100 OHM 5% 1/8W
R 512	1	ERD10TJ821	R:FXD CARBON	820 OHM 5% 1/8W
R 513	1	ERD10TJ222	R:FXD CARBON	2.2K OHM 5% 1/8W
R 514	1	ERD10TJ560	R:FXD CARBON	56 OHM 5% 1/8W
R 515	1	ERD10TJ202	R:FXD CARBON	2K OHM 5% 1/8W
R 516	1	ERD10TJ622	R:FXD CARBON	6.2K OHM 5% 1/8W
R 517	1	ERD10TJ122	R:FXD CARBON	1.2K OHM 5% 1/8W
R 518	1	ERD10TJ750	R:FXD CARBON	75 OHM 5% 1/8W
R 519	1	ERD10TJ202	R:FXD CARBON	2K OHM 5% 1/8W
R 520	1	ERD10TJ332	R:FXD CARBON	3.3K OHM 5% 1/8W
R 521	1	ERD10TJ101	R:FXD CARBON	100 OHM 5% 1/8W

P5610A V MAIN DWG NO 4G205545

REF DES	QTY	PART NO	DESCRIPTION	
R522	1	ERD10TJ821	R:FXD CARBON	820 OHM 5% 1/8W
R523	1	ERD10TJ560	R:FXD CARBON	56 OHM 5% 1/8W
R524	1	ERD10TJ222	R:FXD CARBON	2.2K OHM 5% 1/8W
R525	1	ERD10TJ123	R:FXD CARBON	12K OHM 5% 1/8W
R528	1	ERD10TJ472	R:FXD CARBON	4.7K OHM 5% 1/8W
R529	1	ERO25CKF4320	R:FXD MET FLM	432 OHM 1% 1/4W
R530	1	ERO25CKF4320	R:FXD MET FLM	432 OHM 1% 1/4W
R531	1	ERD10TJ470	R:FXD CARBON	47 OHM 5% 1/8W
R532	1	ERD10TJ470	R:FXD CARBON	47 OHM 5% 1/8W
R533	1	ERD10TJ622	R:FXD CARBON	6.2K OHM 5% 1/8W
R534	1	ERD10TJ242	R:FXD CARBON	2.4K OHM 5% 1/8W
R535	1	ERD10TJ621	R:FXD CARBON	620 OHM 5% 1/8W
R536	1	ERD10TJ432	R:FXD CARBON	4.3K OHM 5% 1/8W
R537	1	ERD10TJ621	R:FXD CARBON	620 OHM 5% 1/8W
R538	1	ERD10TJ432	R:FXD CARBON	4.3K OHM 5% 1/8W
R539	1	ERD10TJ101	R:FXD CARBON	100 OHM 5% 1/8W
R540	1	ERD10TJ221	R:FXD CARBON	220 OHM 5% 1/8W
R541	1	ERD10TJ221	R:FXD CARBON	220 OHM 5% 1/8W
R542	1	ERD10TJ622	R:FXD CARBON	6.2K OHM 5% 1/8W
R543	1	ERD10TJ242	R:FXD CARBON	2.4K OHM 5% 1/8W
R548	1	ERD10TJ272	R:FXD CARBON	2.7K OHM 5% 1/8W
R553	1	ERD10TJ153	R:FXD CARBON	15K OHM 5% 1/8W
R558	1	ERO25CKF1000	R:FXD MET FLM	100 OHM 1% 1/4W
R559	1	ERO25CKF1000	R:FXD MET FLM	100 OHM 1% 1/4W
R560	1	ERD10TJ470	R:FXD CARBON	47 OHM 5% 1/8W
R561	1	ERD10TJ470	R:FXD CARBON	47 OHM 5% 1/8W
R562	1	ERD25TJ750V	R:FXD CARBON	75 OHM 5% 1/4W
R563	1	ERD10TJ560	R:FXD CARBON	56 OHM 5% 1/8W
R564	1	ERO25CKF6040	R:FXD MET FLM	604 OHM 1% 1/4W
R565	1	ERD10TJ680	R:FXD CARBON	68 OHM 5% 1/8W
R566	1	ERD10TJ680	R:FXD CARBON	68 OHM 5% 1/8W
R567	1	ERO25CKF6040	R:FXD MET FLM	604 OHM 1% 1/4W
R568	1	ERD10TJ560	R:FXD CARBON	56 OHM 5% 1/8W
R569	1	TM64K2PV2-13	R:VAR CERMET	1K OHM 20%
R570	1	TM64K2PV2-54	R:VAR CERMET	50K OHM 20%
R572	1	ERD10TJ153	R:FXD CARBON	15K OHM 5% 1/8W
R573	1	ERO25CKF2260	R:FXD MET FLM	226 OHM 1% 1/4W
R574	1	ERO25CKF2260	R:FXD MET FLM	226 OHM 1% 1/4W
R575	1	ERD10TJ562	R:FXD CARBON	5.6K OHM 5% 1/8W
R576	1	ERD10TJ102	R:FXD CARBON	1K OHM 5% 1/8W
R577	1	ERD10TJ470	R:FXD CARBON	47 OHM 5% 1/8W
R578	1	ERD10TJ470	R:FXD CARBON	47 OHM 5% 1/8W
R579	1	ERO25CKF90R9	R:FXD MET FLM	90.9 OHM 1% 1/4W
R580	1	ERO25CKF90R9	R:FXD MET FLM	90.9 OHM 1% 1/4W

P5610A V MAIN DWG NO 4G205545

REF NO	QTY	PART NO	DESCRIPTION	
R 581	1	ERO25CKF82R5	R:FXD MET FLM	82.5 OHM 1% 1/4W
R 582	1	ERD25TJ390V	R:FXD CARBON	39 OHM 5% 1/4W
R 583	1	ERG1SJ470	R FXD MET OXD	47 OHM +-5% 1W
R 584	1	ERG1ANG560	R:FXD MET OXD	56 OHM +-2% 1W
R 585	1	ERG1ANG560	R:FXD MET OXD	56 OHM +-2% 1W
R 586	1	ERG1SJ470	R FXD MET OXD	47 OHM +-5% 1W
R 587	1	ERD10TJ470	R:FXD CARBON	47 OHM 5% 1/8W
R 588	1	ERD10TJ470	R:FXD CARBON	47 OHM 5% 1/8W
R 589	1	ERO25CKF2671	R:FXD MET FLM	2.67K OHM 1% 1/4W
R 590	1	ERO25CKF1001	R:FXD MET FLM	1K OHM 1% 1/4W
R 591	1	RPF-10C250F	R:FXD MET FLM	250 OHM +-1% 4W
R 592	1	RPF-10C250F	R:FXD MET FLM	250 OHM +-1% 4W
R 593	1	TM64K2PV2-13	R:VAR CERMET	1K OHM 20%
R 593	1	TM64K2PV2-14	R:VAR CERMET	10K OHM 20%
R 595	1	ERD10TJ821	R:FXD CARBON	820 OHM 5% 1/8W
R 596	1	ERD10TJ472	R:FXD CARBON	4.7K OHM 5% 1/8W
R 597	1	ERD10TJ822	R:FXD CARBON	8.2K OHM 5% 1/8W
R 598	1	ERD10TJ821	R:FXD CARBON	820 OHM 5% 1/8W
R 1222	1	ERD10TJ472	R:FXD CARBON	4.7K OHM 5% 1/8W
R 1223	1	ERD10TJ622	R:FXD CARBON	6.2K OHM 5% 1/8W
R 1224	1	ERD10TJ222	R:FXD CARBON	2.2K OHM 5% 1/8W

P5610A ANALOG-1 DWG NO 4G205546

F NO	QTY	PART NO	DESCRIPTION	
C 12	1	ECKW1H103ZF5	C:FXD CER HI-K	10000PF +80-20% 50V
C 13	1	ECCD2H010C	C:FXD CER TC	1PF +-0.25PF 500V SL
C 14	1	ECV1ZW10X53T	C:VAR CER	10PF
C 21	1	ECCD2H010C	C:FXD CER TC	1PF +-0.25PF 500V SL
C 21	1	ECEA1HKS010E	C:FXD AL ELECT	50V 1UF +-20%
C 23	1	ECEA1CK101	C:FXD AL ELECT	100UF +-20% 16V
C 27	1	ECEA1CKS100	C:FXD AL ELECT	16V 10UF
C 28	1	ECEA1CKS100	C:FXD AL ELECT	16V 10UF
C 101	1	4G440098-1	C:VAR AIR	1.7PF
C 105	1	ECV1ZW10X53T	C:VAR CER	10PF
C 106	1	ECCF1H330KC	C:FXD CER TC	33PF +-10% 50V NPO
C 106	1	ECCF1H470KC	C:FXD CER TC	47PF +-10% 50V NPO
C 106	1	ECV1ZW20X53T	C:VAR CER	20PF
C 107	1	ECV1ZW10X53T	C:VAR CER	10PF
C 108	1	ECQM1H102JV	C:FXD FLM	50V 1000PF +-10%
C 123	1	ECEA1CKS100	C:FXD AL ELECT	16V 10UF
C 125	1	ECEA1CKS100	C:FXD AL ELECT	16V 10UF
C 127	1	ECEA1CKS100	C:FXD AL ELECT	16V 10UF
C 128	1	ECEA1CKS100	C:FXD AL ELECT	16V 10UF
C 129	1	ECEA1CKS100	C:FXD AL ELECT	16V 10UF
C 130	1	ECEA1CKS470	C:FXD AL ELECT	47UF +-20% 16V
C 201	1	4G440098-1	C:VAR AIR	1.7PF
C 205	1	ECV1ZW10X53T	C:VAR CER	10PF
C 206	1	ECCF1H330KC	C:FXD CER TC	33PF +-10% 50V NPO
C 206	1	ECCF1H470KC	C:FXD CER TC	47PF +-10% 50V NPO
C 206	1	ECV1ZW20X53T	C:VAR CER	20PF
C 207	1	ECV1ZW10X53T	C:VAR CER	10PF
C 208	1	ECQM1H102JV	C:FXD FLM	50V 1000PF +-10%
C 340	1	ECKF1H103ZF	C:FXD CER HI-K	10000PF +80-20% 50V
C 341	1	ECKF1H103ZF	C:FXD CER HI-K	10000PF +80-20% 50V
C 411	1	ECCF1H060DC	C:FXD CER TC	6PF +-0.5PF 50V NPO
C 417	1	ECQM1H102KZ	C:FXD FLM	1000PF 10% 50V
C 420	1	ECKW1H103ZF5	C:FXD CER HI-K	10000PF +80-20% 50V
C 421	1	ECV1ZW20X53T	C:VAR CER	20PF
C 426	1	ECCF1H101KC	C:FXD CER TC	100PF +-10% 50V NPO
C 444	1	ECEA1CKS100	C:FXD AL ELECT	16V 10UF
C 448	1	ECEA0JSS471	C:FXD AL ELECT	470UF +-20% 6.3V
C 501	1	ECCF1H060DC	C:FXD CER TC	6PF +-0.5PF 50V NPO
C 502	1	ECCF1H060DC	C:FXD CER TC	6PF +-0.5PF 50V NPO
C 503	1	ECCF1H391K	C:FXD CER TC	390PF +-10% 50V SL
C 601	1	ECQM1H222KZ	C:FXD FLM	2200PF 10% 50V
C 602	1	ECEA1VKS4R7E	C:FXD AL ELECT	4.7UF +-20% 35V
C 603	1	ECKF1H271KB	C:FXD CER HI-K	270PF +-10% 50V
C 617	1	ECCF1H220KC	C:FXD CER TC	22PF +-10% 50V NPO

P5610A ANALOG-1 DWG NO 4G205546

REF NO	QTY	PART NO	DESCRIPTION	
C 620	1	ECEA1CKS100	C:FXD AL ELECT	16V 10UF
C 701	1	ECQM1H222KZ	C:FXD FLM	2200PF 10% 50V
C 702	1	ECEA1VKS4R7E	C:FXD AL ELECT	4.7UF +-20% 35V
C 703	1	ECKW1H102ZF5	C:FXD CER HI-K	1000PF +80-20% 50V
C 704	1	ECEA1ASS102U	C:FXD AL ELECT	1000UF +-20% 10V
C 706	1	ECKW1H103ZF5	C:FXD CER HI-K	10000PF +80-20% 50V
C 712	1	ECKW1H103ZF5	C:FXD CER HI-K	10000PF +80-20% 50V
C 713	1	ECKW1H103ZF5	C:FXD CER HI-K	10000PF +80-20% 50V
C 714	1	ECKW1H103ZF5	C:FXD CER HI-K	10000PF +80-20% 50V
C 715	1	ECEA1HKS010E	C:FXD AL ELECT	50V 1UF +-20%
C 716	1	ECEA1HKS4R7E	C:FXD AL ELECT	50V 4.7UF +-20%
C 717	1	ECCF1H220KC	C:FXD CER TC	22PF +-10% 50V NPO
C 717	1	ECEA1CKS220	C:FXD AL ELECT	16V 22UF
C 717	1	ECEA1CKS220E	C:FXD AL ELECT	16V 22UF +-20%
C 718	1	ECEA1CKS220	C:FXD AL ELECT	16V 22UF
C 718	1	ECEA1CKS220E	C:FXD AL ELECT	16V 22UF +-20%
C 801	1	ECV1ZW20X53T	C:VAR CER	20PF
C 802	1	XDM15C470K5	C:FXD MICA	47PF 10% 500V
C 803	1	ECV1ZW60X53T	C:VAR CER	60PF
C 804	1	ECQK1102GZ	C:FXD FLM	1000PF 2% 100V
C 805	1	ECQM1H103JV	C:FXD FLM	50V 10000PF +-10%
C 806	1	ECQK1105GG	C:FXD FLM	1UF 2% 100V
C 808	1	ECQM1H103JV	C:FXD FLM	50V 10000PF +-10%
C 809	1	ECEA1EKK3R3	C:FXD AL ELECT	16V 3.3UF +-20%
C 810	1	ECV1ZW20X53T	C:VAR CER	20PF
C 811	1	XDM15C390K5	C:FXD MICA	39PF 10% 500V
C 812	1	ECV1ZW60X53T	C:VAR CER	60PF
C 813	1	ECQK1102GZ	C:FXD FLM	1000PF 2% 100V
C 814	1	ECQM1H103JV	C:FXD FLM	50V 10000PF +-10%
C 815	1	ECQK1105GG	C:FXD FLM	1UF 2% 100V
C 905	1	ECEA1CKS220	C:FXD AL ELECT	16V 22UF
C 905	1	ECKW2H103PE8	C:FXD CER HI-K	10000PF +100-0% 500V
C 1012	1	ECKW1H103ZF5	C:FXD CER HI-K	10000PF +80-20% 50V
C 1013	1	ECCF1H471K	C:FXD CER TC	470PF +-10% 50V SL
C 1025	1	ECKW2H103PE8	C:FXD CER HI-K	10000PF +100-0% 500V
C 1026	1	ECKW2H103PE8	C:FXD CER HI-K	10000PF +100-0% 500V
C 1201	1	ECEA1HKS010E	C:FXD AL ELECT	50V 1UF +-20%
C 1202	1	ECEA1HKS010E	C:FXD AL ELECT	50V 1UF +-20%
C 1203	1	ECEA1HKS010E	C:FXD AL ELECT	50V 1UF +-20%
C 1204	1	ECEA1HKS010E	C:FXD AL ELECT	50V 1UF +-20%
C 1206	1	ECEA1HKS010E	C:FXD AL ELECT	50V 1UF +-20%
C 1207	1	ECEA1HKS100	C:FXD AL ELECT	10UF +-20% 50V
C 1209	1	ECCF1H470K	C:FXD CER TC	47PF +-10% 50V SL
C 1210	1	ECKW1H103ZF5	C:FXD CER HI-K	10000PF +80-20% 50V

P5610A ANALOG-1 DWG NO 4G205546

NO	QTY	PART NO	DESCRIPTION	
1211	1	ECKW1H103ZF5	C:FXD CER HI-K	10000PF +80-20% 50V
1212	1	ECV1ZW06X53T	C:VAR CER	6PF
1214	1	ECV1ZW20X53T	C:VAR CER	20PF
1215	1	ECCF1H471K	C:FXD CER TC	470PF +-10% 50V SL
1236	1	ECEA1CKS220E	C:FXD AL ELECT	16V 22UF +-20%
1237	1	ECEA1CKS220E	C:FXD AL ELECT	16V 22UF +-20%
1242	1	ECKW1H103ZF5	C:FXD CER HI-K	10000PF +80-20% 50V
1243	1	ECKW1H103ZF5	C:FXD CER HI-K	10000PF +80-20% 50V
1244	1	ECKW1H103ZF5	C:FXD CER HI-K	10000PF +80-20% 50V
1249	1	ECEA1CKS100	C:FXD AL ELECT	16V 10UF
1250	1	ECEA1CKS100	C:FXD AL ELECT	16V 10UF
1253	1	ECEA1CK101	C:FXD AL ELECT	100UF +-20% 16V
1255	1	ECKW1H103ZF5	C:FXD CER HI-K	10000PF +80-20% 50V
1259	1	ECV1ZW20X53T	C:VAR CER	20PF
1260	1	ECKF1H103ZF	C:FXD CER HI-K	10000PF +80-20% 50V
11	1	MA150TA	DIODE:SI	100MA 35V
401	1	MA150TA	DIODE:SI	100MA 35V
402	1	MA150TA	DIODE:SI	100MA 35V
405	1	MA150TA	DIODE:SI	100MA 35V
406	1	MA150TA	DIODE:SI	100MA 35V
411	1	MA150TA	DIODE:SI	100MA 35V
501	1	MA150TA	DIODE:SI	100MA 35V
910	1	MA150TA	DIODE:SI	100MA 35V
911	1	MA150TA	DIODE:SI	100MA 35V
1025	1	1SS83TP	DIODE:SWITCHING	200MA 250V
1206	1	MA150TA	DIODE:SI	100MA 35V
	1	1G401336-0		
	2	4G470939	CABLE	10P
	1	65039-030	CONNECTOR	LATCH HOUSING 7P
	1	65039-033	CONNECTOR	LATCH HOUSING 4P
	1	65039-034	CONNECTOR	LATCH HOUSING 3P
	8	65039-035	CONNECTOR	LATCH HOUSING 2P
	5	65501-203	CONNRCTOR:PIN	3P ANGLE TYPE
	1	65501-204	CONNECTOR:PIN	4P ANGLE TYPE
	2	65501-205	CONNECTOR:PIN	5P ANGLE TYPE
	2	65501-206	CONNECTOR:PIN	6P ANGLE TYPE
	1	65501-207	CONNECTOR:PIN	7P ANGLE TYPE
	1	65501-208	CONNRCTOR:PIN	8P ANGLE TYPE
220	1	65501-202	CONNECTOR:PIN	2P ANGLE TYPE
704	1	HLEM30S-1	CONNECTOR:PIN	30P
1002	1	HLEM20S-1	CONNECTOR:PIN	20P

P5610A ANALOG-1 DWG NO 4G205546

REF NO	QTY	PART NO	DESCRIPTION	
K 101	1	RR-4S	REED RELAY	4.5V 22MA 150R
K 102	1	RR-4S	REED RELAY	4.5V 22MA 150R
K 103	1	RR-4S	REED RELAY	4.5V 22MA 150R
K 201	1	RR-4S	REED RELAY	4.5V 22MA 150R
K 202	1	RR-4S	REED RELAY	4.5V 22MA 150R
K 203	1	RR-4S	REED RELAY	4.5V 22MA 150R
L 415	1	ELEMH5R6MA	COIL:CHOKE	
L 416	1	ELEMH5R6MA	COIL:CHOKE	
L 417	1	ELEH2R2KA	COIL:CHOKE	2.2UH 20%
L 417	1	ELEMH5R6MA	COIL:CHOKE	
L 418	1	ELEMH5R6MA	COIL:CHOKE	
L 418	1	4G430844-1	P5410A COIL:CHOKE	HV
L 419	1	3L0004	FERRITE CORE	
L 420	1	3L0004	FERRITE CORE	
L 640	1	ELEMH5R6MA	COIL:CHOKE	
L 641	1	ELEMH5R6MA	COIL:CHOKE	
MP	1	A76J-79M10	SUPPORT-900:PCB	
MP 371	1	3G614164-0BB	P5610A SHIELD:V-H AMP	
MP 372	1	4G617511-1C	P5610A SHIELD:HEAD AMP	
MP 373	1	4G617511-1C	P5610A SHIELD:HEAD AMP	
MP 374	1	4G617512-0BB	P5610A PLATE:NUT-ATTEN	
MP 375	1	4G644594-0CB	SPACER:M2.5-9X0.45MM	
MP 376	1	4G644594-0CB	SPACER:M2.5-9X0.45MM	
MP 377	1	4G760650-0W	P5610A GUIDE:VR	
MP 378	1	4G760650-0W	P5610A GUIDE:VR	
MP 379	1	4G760650-0W	P5610A GUIDE:VR	
MP 380	1	4G760650-0W	P5610A GUIDE:VR	
Q 100	1	2SC1359-AB	TSTR:SI NPN	PC:250MW FT:300MHZ
Q 101	1	2SC828A-RS	TSTR:SI NPN	PC:250MW FT:220MHZ
Q 102	1	2SC828A-RS	TSTR:SI NPN	PC:250MW FT:220MHZ
Q 103	1	2SC828A-RS	TSTR:SI NPN	PC:250MW FT:220MHZ
Q 104	1	2N4391	TSTR:FET	PC:1.8W VGSS:-40V TO18
Q 201	1	2SC828A-RS	TSTR:SI NPN	PC:250MW FT:220MHZ
Q 202	1	2SC828A-RS	TSTR:SI NPN	PC:250MW FT:220MHZ
Q 203	1	2SC828A-RS	TSTR:SI NPN	PC:250MW FT:220MHZ
Q 204	1	2N4391	TSTR:FET	PC:1.8W VGSS:-40V TO18
Q 331	1	2SA1206	TSTR:SI PNP	PC:600MW FT:1000MHZ
Q 332	1	2SA1206	TSTR:SI PNP	PC:600MW FT:1000MHZ
Q 401	1	2SC828A-RS	TSTR:SI NPN	PC:250MW FT:220MHZ
Q 411	1	2SC2026	TSTR:SI NPN	PC:250MW FT:2000MHZ
Q 601	1	2SA1206	TSTR:SI PNP	PC:600MW FT:1000MHZ
Q 803	1	2SC2206C	TSTR:SI NPN	400MW 30V 30MA FT 300M

P5610A ANALOG-1 DWG NO 4G205546

REF NO	QTY	PART NO	DESCRIPTION	
804	1	2SC2206C	TSTR:SI NPN	400MW 30V 30MA FT 300MHZ
805	1	2SC2206C	TSTR:SI NPN	400MW 30V 30MA FT 300MHZ
1206	1	2SA838	TSTR:SI PNP	PC:250MW FT:300MHZ
1207	1	2SC828A-RS	TSTR:SI NPN	PC:250MW FT:220MHZ
1208	1	2SC2901	TSTR:SI NPN	PC:600MW FT:750MHZ
1209	1	2SC2901	TSTR:SI NPN	PC:600MW FT:750MHZ
13	1	ERD10TJ103	R:FXD CARBON	10K OHM 5% 1/8W
17	1	ERD10TJ103	R:FXD CARBON	10K OHM 5% 1/8W
21	1	ERD10TJ222	R:FXD CARBON	2.2K OHM 5% 1/8W
22	1	ERD10TJ122	R:FXD CARBON	1.2K OHM 5% 1/8W
22	1	ERD10TJ223	R:FXD CARBON	22K OHM 5% 1/8W
23	1	ERD10TJ182	R:FXD CARBON	1.8K OHM 5% 1/8W
24	1	ERD10TJ154	R:FXD CARBON	150K OHM 5% 1/8W
25	1	ERD10TJ823	R:FXD CARBON	82K OHM 5% 1/8W
26	1	ERD10TJ683	R:FXD CARBON	68K OHM 5% 1/8W
101	1	ERD10TJ102	R:FXD CARBON	1K OHM 5% 1/8W
103	1	TM64K2PV2-24	R:VAR CERMET	20K OHM 20%
104	1	ERD10TJ302	R:FXD CARBON	3K OHM 5% 1/8W
105	1	TM64K2PV2-24	R:VAR CERMET	20K OHM 20%
106	1	TM64K2PV2-54	R:VAR CERMET	50K OHM 20%
107	1	TM64K2PV2-12	R:VAR CERMET	100 OHM 20%
108	1	TM64K2PV2-12	R:VAR CERMET	100 OHM 20%
109	1	ERD10TJ470	R:FXD CARBON	47 OHM 5% 1/8W
110	1	TM64K2PV2-14	R:VAR CERMET	10K OHM 20%
111	1	ERD25TJ331V	R:FXD CARBON	330 OHM 5% 1/4W
114	1	ERD25TJ621V	R:FXD CARBON	620 OHM 5% 1/4W
115	1	ERD25TJ102V	R:FXD CARBON	1K OHM 5% 1/4W
117	1	ERD10TJ183	R:FXD CARBON	18K OHM 5% 1/8W
121	1	ERD10TJ473	R:FXD CARBON	47K OHM 5% 1/8W
121	1	TM64K2PV2-13	R:VAR CERMET	1K OHM 20%
122	1	ERD10TJ473	R:FXD CARBON	47K OHM 5% 1/8W
126	1	ERD10TJ222	R:FXD CARBON	2.2K OHM 5% 1/8W
127	1	TM64K2PV2-52	R:VAR CERMET	500 OHM 20%
130	1	ERD10TJ4R7	R:FXD CARBON	4.7 OHM 5% 1/8
131	1	ERD10TJ4R7	R:FXD CARBON	4.7 OHM 5% 1/8
135	1	ERD25TJ4R7V	R:FXD CARBON	4.7 OHM 5% 1/4W
136	1	ERD25TJ4R7V	R:FXD CARBON	4.7 OHM 5% 1/4W
201	1	ERD10TJ102	R:FXD CARBON	1K OHM 5% 1/8W
203	1	TM64K2PV2-24	R:VAR CERMET	20K OHM 20%
204	1	ERD10TJ302	R:FXD CARBON	3K OHM 5% 1/8W
205	1	TM64K2PV2-24	R:VAR CERMET	20K OHM 20%
206	1	TM64K2PV2-54	R:VAR CERMET	50K OHM 20%
207	1	TM64K2PV2-12	R:VAR CERMET	100 OHM 20%

P5610A ANALOG-1 DWG NO 4G205546

REF	NO	QTY	PART NO	DESCRIPTION	
R	208	1	TM64K2PV2-12	R:VAR CERMET	100 OHM 20%
R	209	1	ERD10TJ470	R:FXD CARBON	47 OHM 5% 1/8W
R	210	1	TM64K2PV2-14	R:VAR CERMET	10K OHM 20%
R	217	1	ERD10TJ183	R:FXD CARBON	18K OHM 5% 1/8W
R	220	1	ERD10TJ4R7	R:FXD CARBON	4.7 OHM 5% 1/8
R	221	1	ERD10TJ473	R:FXD CARBON	47K OHM 5% 1/8W
R	221	1	TM64K2PV2-13	R:VAR CERMET	1K OHM 20%
R	222	1	ERD10TJ473	R:FXD CARBON	47K OHM 5% 1/8W
R	226	1	ERD10TJ222	R:FXD CARBON	2.2K OHM 5% 1/8W
R	227	1	TM64K2PV2-52	R:VAR CERMET	500 OHM 20%
R	230	1	ERD10TJ100	R:FXD CARBON	10 OHM 5% 1/8W
R	231	1	ERD10TJ100	R:FXD CARBON	10 OHM 5% 1/8W
R	231	1	ERD10TJ4R7	R:FXD CARBON	4.7 OHM 5% 1/8
R	331	1	ERD10TJ100	R:FXD CARBON	10 OHM 5% 1/8W
R	332	1	ERD10TJ100	R:FXD CARBON	10 OHM 5% 1/8W
R	333	1	ERD10TJ562	R:FXD CARBON	5.6K OHM 5% 1/8W
R	334	1	ERD10TJ472	R:FXD CARBON	4.7K OHM 5% 1/8W
R	401	1	ERD25TJ330V	R:FXD CARBON	33 OHM 5% 1/4W
R	402	1	ERD25TJ330V	R:FXD CARBON	33 OHM 5% 1/4W
R	403	1	ERD25TJ330V	R:FXD CARBON	33 OHM 5% 1/4W
R	404	1	ERD25TJ330V	R:FXD CARBON	33 OHM 5% 1/4W
R	405	1	ERD10TJ750	R:FXD CARBON	75 OHM 5% 1/8W
R	405	1	ERD25TJ271V	R:FXD CARBON	270 OHM 5% 1/4W
R	406	1	ERD10TJ750	R:FXD CARBON	75 OHM 5% 1/8W
R	407	1	ERD10TJ750	R:FXD CARBON	75 OHM 5% 1/8W
R	408	1	ERD10TJ510	R:FXD CARBON	51 OHM 5% 1/8W
R	408	1	ERD25TJ220V	R:FXD CARBON	22 OHM 5% 1/4W
R	409	1	ERD10TJ510	R:FXD CARBON	51 OHM 5% 1/8W
R	409	1	ERD25TJ220V	R:FXD CARBON	22 OHM 5% 1/4W
R	410	1	ERD10TJ361	R:FXD CARBON	360 OHM 5% 1/8W
R	410	1	ERD25TJ101V	R:FXD CARBON	100 OHM 5% 1/4W
R	411	1	ERD10TJ392	R:FXD CARBON	3.9K OHM 5% 1/8W
R	413	1	ERD10TJ101	R:FXD CARBON	100 OHM 5% 1/8W
R	414	1	ERD10TJ202	R:FXD CARBON	2K OHM 5% 1/8W
R	415	1	ERD10TJ510	R:FXD CARBON	51 OHM 5% 1/8W
R	416	1	ERD25TJ4R7V	R:FXD CARBON	4.7 OHM 5% 1/4W
R	417	1	TM64K2PV2-12	R:VAR CERMET	100 OHM 20%
R	418	1	TM64K2PV2-13	R:VAR CERMET	1K OHM 20%
R	419	1	TM64K2PV2-13	R:VAR CERMET	1K OHM 20%
R	420	1	ERD10TJ103	R:FXD CARBON	10K OHM 5% 1/8W
R	420	1	TM64K2PV2-13	R:VAR CERMET	1K OHM 20%
R	421	1	ERD10TJ103	R:FXD CARBON	10K OHM 5% 1/8W
R	422	1	TM64K2PV2-13	R:VAR CERMET	1K OHM 20%
R	423	1	ERD10TJ103	R:FXD CARBON	10K OHM 5% 1/8W

P5610A ANALOG-1 DWG NO 4G205546

Σ NO	QTY	PART NO	DESCRIPTION	
423	1	TM64K2PV2-12	R:VAR CERMET	100 OHM 20%
424	1	TM64K2PV2-52	R:VAR CERMET	500 OHM 20%
425	1	TM64K2PV2-52	R:VAR CERMET	500 OHM 20%
426	1	ERD10TJ471	R:FXD CARBON	470 OHM 5% 1/8W
427	1	ERD10TJ103	R:FXD CARBON	10K OHM 5% 1/8W
428	1	ERD10TJ152	R:FXD CARBON	1.5K OHM 5% 1/8W
428	1	TM64K2PV2-24	R:VAR CERMET	20K OHM 20%
430	1	ERD10TJ222	R:FXD CARBON	2.2K OHM 5% 1/8W
432	1	ERD10TJ101	R:FXD CARBON	100 OHM 5% 1/8W
432	1	ERD10TJ220	R:FXD CARBON	22 OHM 5% 1/8W
433	1	ERD10TJ101	R:FXD CARBON	100 OHM 5% 1/8W
433	1	ERD10TJ220	R:FXD CARBON	22 OHM 5% 1/8W
434	1	ERD10TJ101	R:FXD CARBON	100 OHM 5% 1/8W
434	1	ERD10TJ220	R:FXD CARBON	22 OHM 5% 1/8W
435	1	ERD10TJ220	R:FXD CARBON	22 OHM 5% 1/8W
436	1	ERD10TJ470	R:FXD CARBON	47 OHM 5% 1/8W
437	1	ERD10TJ332	R:FXD CARBON	3.3K OHM 5% 1/8W
439	1	ERD10TJ470	R:FXD CARBON	47 OHM 5% 1/8W
440	1	ERD10TJ470	R:FXD CARBON	47 OHM 5% 1/8W
441	1	ERD10TJ470	R:FXD CARBON	47 OHM 5% 1/8W
441	1	ERD10TJ511	R:FXD CARBON	510 OHM 5% 1/8W
501	1	ERD10TJ332	R:FXD CARBON	3.3K OHM 5% 1/8W
502	1	ERD10TJ332	R:FXD CARBON	3.3K OHM 5% 1/8W
601	1	ERD10TJ473	R:FXD CARBON	47K OHM 5% 1/8W
602	1	ERD10TJ122	R:FXD CARBON	1.2K OHM 5% 1/8W
603	1	ERD10TJ101	R:FXD CARBON	100 OHM 5% 1/8W
604	1	ERD10TJ220	R:FXD CARBON	22 OHM 5% 1/8W
604	1	ERD10TJ470	R:FXD CARBON	47 OHM 5% 1/8W
605	1	ERD10TJ512	R:FXD CARBON	5.1K OHM 5% 1/8W
606	1	ERD10TJ102	R:FXD CARBON	1K OHM 5% 1/8W
608	1	ERD10TJ102	R:FXD CARBON	1K OHM 5% 1/8W
609	1	ERD10TJ271	R:FXD CARBON	270 OHM 5% 1/8W
610	1	ERD10TJ472	R:FXD CARBON	4.7K OHM 5% 1/8W
611	1	ERD10TJ332	R:FXD CARBON	3.3K OHM 5% 1/8W
612	1	ERD10TJ102	R:FXD CARBON	1K OHM 5% 1/8W
615	1	ERD10TJ104	R:FXD CARBON	100K OHM 5% 1/8W
616	1	ERD10TJ222	R:FXD CARBON	2.2K OHM 5% 1/8W
617	1	ERD10TJ220	R:FXD CARBON	22 OHM 5% 1/8W
619	1	ERD10TJ101	R:FXD CARBON	100 OHM 5% 1/8W
619	1	ERD10TJ103	R:FXD CARBON	10K OHM 5% 1/8W
621	1	ERD10TJ683	R:FXD CARBON	68K OHM 5% 1/8W
621	1	ERD10TJ823	R:FXD CARBON	82K OHM 5% 1/8W
622	1	ERD10TJ222	R:FXD CARBON	2.2K OHM 5% 1/8W
623	1	ERD10TJ512	R:FXD CARBON	5.1K OHM 5% 1/8W

P5610A ANALOG-1 DWG NO 4G205546

REF	NO	QTY	PART NO	DESCRIPTION	
R	623	1	ERD10TJ621	R:FXD CARBON	620 OHM 5% 1/8W
R	624	1	ERD10TJ621	R:FXD CARBON	620 OHM 5% 1/8W
R	624	1	TM64K2PV2-54	R:VAR CERMET	50K OHM 20%
R	630	1	ERD10TJ104	R:FXD CARBON	100K OHM 5% 1/8W
R	640	1	ERD10TJ4R7	R:FXD CARBON	4.7 OHM 5% 1/8
R	641	1	ERD10TJ4R7	R:FXD CARBON	4.7 OHM 5% 1/8
R	643	1	ERD10TJ133	R:FXD CARBON	13K OHM 5% 1/8W
R	646	1	ERD10TJ102	R:FXD CARBON	1K OHM 5% 1/8W
R	648	1	ERD10TJ101	R:FXD CARBON	100 OHM 5% 1/8W
R	649	1	ERD10TJ101	R:FXD CARBON	100 OHM 5% 1/8W
R	649	1	ERD10TJ472	R:FXD CARBON	4.7K OHM 5% 1/8W
R	650	1	ERD10TJ101	R:FXD CARBON	100 OHM 5% 1/8W
R	650	1	ERO10CKF4991	R:FXD MET FLM	4.99K OHM 1% 1/8W
R	681	1	ERD10TJ4R7	R:FXD CARBON	4.7 OHM 5% 1/8
R	701	1	ERD10TJ512	R:FXD CARBON	5.1K OHM 5% 1/8W
R	702	1	ERD10TJ102	R:FXD CARBON	1K OHM 5% 1/8W
R	703	1	ERD10TJ222	R:FXD CARBON	2.2K OHM 5% 1/8W
R	704	1	ERD10TJ220	R:FXD CARBON	22 OHM 5% 1/8W
R	704	1	ERD10TJ222	R:FXD CARBON	2.2K OHM 5% 1/8W
R	705	1	ERD10TJ102	R:FXD CARBON	1K OHM 5% 1/8W
R	706	1	ERD10TJ102	R:FXD CARBON	1K OHM 5% 1/8W
R	708	1	ERD10TJ471	R:FXD CARBON	470 OHM 5% 1/8W
R	710	1	ERD10TJ472	R:FXD CARBON	4.7K OHM 5% 1/8W
R	711	1	ERD10TJ332	R:FXD CARBON	3.3K OHM 5% 1/8W
R	712	1	ERD10TJ102	R:FXD CARBON	1K OHM 5% 1/8W
R	713	1	ERD10TJ102	R:FXD CARBON	1K OHM 5% 1/8W
R	715	1	ERD10TJ222	R:FXD CARBON	2.2K OHM 5% 1/8W
R	717	1	ERD10TJ220	R:FXD CARBON	22 OHM 5% 1/8W
R	718	1	ERD25TJ101V	R:FXD CARBON	100 OHM 5% 1/4W
R	719	1	ERD25TJ272V	R:FXD CARBON	2.7K OHM 5% 1/4W
R	720	1	ERD25TJ330V	R:FXD CARBON	33 OHM 5% 1/4W
R	721	1	ERD10TJ184	R:FXD CARBON	180K OHM 5% 1/8W
R	750	1	ERO10CKF4991	R:FXD MET FLM	4.99K OHM 1% 1/8W
R	803	1	ERD10TJ103	R:FXD CARBON	10K OHM 5% 1/8W
R	803	1	TM64K2PV2-24	R:VAR CERMET	20K OHM 20%
R	804	1	ERD10TJ103	R:FXD CARBON	10K OHM 5% 1/8W
R	805	1	ERD10TJ103	R:FXD CARBON	10K OHM 5% 1/8W
R	900	1	ERD10TJ182	R:FXD CARBON	1.8K OHM 5% 1/8W
R	901	1	ERD10TJ470	R:FXD CARBON	47 OHM 5% 1/8W
R	902	1	ERO25CKF4221	R:FXD MET FLM	4.22K OHM 1% 1/4W
R	903	1	TM64K2PV2-22	R:VAR CERMET	200 OHM 20%
R	904	1	ERO25CKF3921	R:FXD MET FLM	3.92K OHM 1% 1/4W
R	905	1	ERD10TJ470	R:FXD CARBON	47 OHM 5% 1/8W
R	906	1	TM64K2PV2-13	R:VAR CERMET	1K OHM 20%

P5610A ANALOG-1 DWG NO 4G205546

REF NO	QTY	PART NO	DESCRIPTION	
907	1	ERD10TJ272	R:FXD CARBON	2.7K OHM 5% 1/8W
908	1	ERD10TJ470	R:FXD CARBON	47 OHM 5% 1/8W
909	1	ERD10TJ103	R:FXD CARBON	10K OHM 5% 1/8W
910	1	ERD10TJ133	R:FXD CARBON	13K OHM 5% 1/8W
910	1	ERD10TJ153	R:FXD CARBON	15K OHM 5% 1/8W
912	1	TM64K2PV2-14	R:VAR CERMET	10K OHM 20%
913	1	TM64K2PV2-12	R:VAR CERMET	100 OHM 20%
914	1	TM64K2PV2-52	R:VAR CERMET	500 OHM 20%
915	1	ERD10TJ151	R:FXD CARBON	150 OHM 5% 1/8W
916	1	ERD10TJ152	R:FXD CARBON	1.5K OHM 5% 1/8W
924	1	ERD10TJ221	R:FXD CARBON	220 OHM 5% 1/8W
925	1	ERD10TJ203	R:FXD CARBON	20K OHM 5% 1/8W
930	1	ERD10TJ151	R:FXD CARBON	150 OHM 5% 1/8W
1001	1	TM64K2PV2-54	R:VAR CERMET	50K OHM 20%
1005	1	TM64K2PV2-54	R:VAR CERMET	50K OHM 20%
1021	1	TM64K2PV2-54	R:VAR CERMET	50K OHM 20%
1023	1	TM64K2PV2-54	R:VAR CERMET	50K OHM 20%
1030	1	ERD10TJ123	R:FXD CARBON	12K OHM 5% 1/8W
1031	1	ERD10TJ101	R:FXD CARBON	100 OHM 5% 1/8W
1032	1	ERD10TJ510	R:FXD CARBON	51 OHM 5% 1/8W
1051	1	ERD10TJ203	R:FXD CARBON	20K OHM 5% 1/8W
1054	1	ERD10TJ273	R:FXD CARBON	27K OHM 5% 1/8W
1214	1	ERD10TJ392	R:FXD CARBON	3.9K OHM 5% 1/8W
1215	1	ERD10TJ472	R:FXD CARBON	4.7K OHM 5% 1/8W
1216	1	ERD10TJ472	R:FXD CARBON	4.7K OHM 5% 1/8W
1217	1	ERD10TJ472	R:FXD CARBON	4.7K OHM 5% 1/8W
1218	1	ERD10TJ472	R:FXD CARBON	4.7K OHM 5% 1/8W
1221	1	ERD10TJ272	R:FXD CARBON	2.7K OHM 5% 1/8W
1225	1	ERD10TJ472	R:FXD CARBON	4.7K OHM 5% 1/8W
1226	1	ERD10TJ272	R:FXD CARBON	2.7K OHM 5% 1/8W
1234	1	ERD10TJ150	R:FXD CARBON	15 OHM 5% 1/8W
1236	1	ERD10TJ150	R:FXD CARBON	15 OHM 5% 1/8W
1239	1	ERD10TJ511	R:FXD CARBON	510 OHM 5% 1/8W
1254	1	TM64K2PV2-54	R:VAR CERMET	50K OHM 20%
1255	1	ERD10TJ104	R:FXD CARBON	100K OHM 5% 1/8W
1256	1	TM64K2PV2-54	R:VAR CERMET	50K OHM 20%
1257	1	ERD10TJ104	R:FXD CARBON	100K OHM 5% 1/8W
1259	1	ERD10TJ221	R:FXD CARBON	220 OHM 5% 1/8W
1265	1	ERD10TJ272	R:FXD CARBON	2.7K OHM 5% 1/8W
1267	1	ERD10TJ272	R:FXD CARBON	2.7K OHM 5% 1/8W
1268	1	ERD10TJ272	R:FXD CARBON	2.7K OHM 5% 1/8W
1271	1	ERD10TJ272	R:FXD CARBON	2.7K OHM 5% 1/8W
1274	1	ERD10TJ152	R:FXD CARBON	1.5K OHM 5% 1/8W
1275	1	ERD10TJ622	R:FXD CARBON	6.2K OHM 5% 1/8W

P5610A ANALOG-1 DWG NO 4G205546

REF	NO	QTY	PART NO	DESCRIPTION	
R	1279	1	ERD10TJ752	R:FXD CARBON	7.5K OHM 5% 1/8W
R	1313	1	ERD10TJ752	R:FXD CARBON	7.5K OHM 5% 1/8W
R	1319	1	ERD10TJ4R7	R:FXD CARBON	4.7 OHM 5% 1/8
R	1320	1	ERD10TJ4R7	R:FXD CARBON	4.7 OHM 5% 1/8
R	1321	1	ERD10TJ221	R:FXD CARBON	220 OHM 5% 1/8W
R	1328	1	ERD25TJ102V	R:FXD CARBON	1K OHM 5% 1/4W
R	1329	1	ERD25TJ101V	R:FXD CARBON	100 OHM 5% 1/4W
R	1330	1	ERD25TJ471V	R:FXD CARBON	470 OHM 5% 1/4W
R	1333	1	ERD10TJ333	R:FXD CARBON	33K OHM 5% 1/8W
R	1334	1	ERD10TJ152	R:FXD CARBON	1.5K OHM 5% 1/8W
S	411	1	EVQRAAL10	LEVER SW	DC 30V 300MA
U	101	1	GK2317	IC:HYBRID HEAD AMP	RF.AMP
U	102	1	GK1335B	IC:HYBRID PRE AMP	RF.AMP
U	121	1	GK1422	IC HYBRID AUTO V 1	RF.AMP
U	122	1	GK1342	IC HYBRID AUTO V 2	RF.AMP
U	201	1	GK2317	IC:HYBRID HEAD AMP	RF.AMP
U	202	1	GK1335B	IC:HYBRID PRE AMP	RF.AMP
U	221	1	GK1422	IC HYBRID AUTO V 1	RF.AMP
U	222	1	GK1342	IC HYBRID AUTO V 2	RF.AMP
U	403	1	GK4240B	IC:HYBRID PRE OUT	RF.AMP
U	411	1	GK1339	IC:HYBRID TRIG AMP 2	RF.AMP
U	412	1	GK2418	IC HYBRID TRIG AMP 1	RF.AMP
U	414	1	GK2420	IC HYBRID CH2 SIG OUT	RF.AMP
U	415	1	GK2421C	IC:HYBRID X-Y	
U	421	1	GK4238	IC HYBRID V MODE 1	RF.AMP
U	422	1	GK4239	IC HYBRID V MODE 2	RF.AMP
U	601	1	GK4241	IC:HYBRID SOURCE SW	RF.AMP
U	602	1	GK4242B	IC:HYBRID TRIGGER	RF.AMP
U	603	1	TC40H164P	IC:C MOS	8-BIT SHIFT REGISTER
U	605	1	HD10107	IC:ECL	TRIPLE 2-IN X OR/NOR
U	606	1	TC4052BP	IC:C MOS	DIFF 4-CH MUX/DEMUX
U	641	1	GK1336B	IC:HYBRID AUTO H	RF.AMP
U	642	1	GK1337B	IC:HYBRID A SWEEP	RF.AMP
U	643	1	HD10131	IC:ECL	DUAL D MASTER-SLAVE F-F
U	701	1	GK4241	IC:HYBRID SOURCE SW	RF.AMP
U	702	1	GK4242B	IC:HYBRID TRIGGER	RF.AMP
U	703	1	TC40H164P	IC:C MOS	8-BIT SHIFT REGISTER
U	704	1	EHM826W19A	P5230A HI MIC	TV SWEEP
U	705	1	HD10107	IC:ECL	TRIPLE 2-IN X OR/NOR
U	706	1	TC4052BP	IC:C MOS	DIFF 4-CH MUX/DEMUX
U	710	1	CMOS4094BP	IC:C MOS	8-STAGE BUS REGISTER
U	742	1	GK1338B	IC:HYBRID B SWEEP	RF.AMP
U	801	1	MN6631A	IC:C MOS	ANALOG SWICH

P5610A ANALOG-1 DWG NO 4G205546

I' NO	QTY	PART NO	DESCRIPTION	
802	1	GK1423	IC:HYBRID TIMING	RF.AMP
803	1	TC40H164P	IC:C MOS	8-BIT SHIFT REGISTER
804	1	CMOS4556BP	IC:C MOS	DUAL 1-OF-4 DECODER
806	1	CMOS4555BP	IC:C MOS	DUAL BINARY DECODER
807	1	GK2422C	IC:HYBRID TIMING SW	
808	1	GK2422B	IC:HYBRID TIMING SW	RF.AMP
809	1	GK1423	IC:HYBRID TIMING	RF.AMP
810	1	TC40H164P	IC:C MOS	8-BIT SHIFT REGISTER
811	1	CMOS4555BP	IC:C MOS	DUAL BINARY DECODER
812	1	CMOS4556BP	IC:C MOS	DUAL 1-OF-4 DECODER
814	1	GK2422C	IC:HYBRID TIMING SW	
901	1	GK1344B	IC:HYBRID H PRE	RF.AMP
902	1	GK1340	IC:HYBRID H MAIN	RF.AMP
1002	1	GK4244	IC:HYBRID Z DRIVE	RF.AMP
1003	1	GK2316	IC HYBRID Z AXIS	RF.AMP
401	1	RD4.3EB2	DIODE:ZENER	4.1V 500MW
406	1	RD8.2EB3	DIODE:ZENER	8.2V 500MW
1202	1	4G470935	CABLE(2)	30P 60MM

P5610A ANALOG-2 DWG NO 4G205547

REF NO	QTY	PART NO	DESCRIPTION	
C 650	1	ECKF1H102KB	C:FXD CER HI-K	1000PF +-10% 50V
C 651	1	ECEA1CKS470	C:FXD AL ELECT	47UF +-20% 16V
C 1238	1	ECBA1E103MR	C:FXD CER TC	0.01UF +-20% 25V
C 1239	1	ECBA1E103MR	C:FXD CER TC	0.01UF +-20% 25V
C 1240	1	ECBA1E103MR	C:FXD CER TC	0.01UF +-20% 25V
C 1241	1	ECBA1E103MR	C:FXD CER TC	0.01UF +-20% 25V
CR 1223	1	MA150TA	DIODE:SI	100MA 35V
CR 1224	1	MA150TA	DIODE:SI	100MA 35V
E	1	1G401305-2	P5610A ANALOG-2 PC BOARD	
F 310	1	IEC1AT	FUSE : TIME LAG	1A 250V 20MM
FL 303	1	ZJY51R5-8P	FILTER	INLET AC250V 5A
J	2	65039-029	CONNECTOR	LATCH HOUSING 8P
J	2	65039-032	CONNECTOR	LATCH HOUSING 5P
J	1	65039-034	CONNECTOR	LATCH HOUSING 3P
J	3	65501-202	CONNECTOR:PIN	2P ANGLE TYPE
J	1	65501-203	CONNRCTOR:PIN	3P ANGLE TYPE
J	1	65501-204	CONNECTOR:PIN	4P ANGLE TYPE
J	1	65501-205	CONNECTOR:PIN	5P ANGLE TYPE
J 302	1	SLEM20S-2	CONECTOR:ZIFLOK	20P STRAIGHT
J 304	1	HLEM30R-1	CONNECTOR:PIN	30P
J 309	1	M3115P01	CONNECTOR:PIN	15P
J 311	1	PS10PAD4T1A1	CONNECTOR	10P
J 319	1	HLEM20R-1	CONNECTOR:PIN	20P
J 322	1	PS10PAD4T1A1	CONNECTOR	10P
J 323	1	PS10PAD4T1A1	CONNECTOR	10P
J 324	1	PS10PAD4T1A1	CONNECTOR	10P
J 325	1	PS20PAD4T1A1	CONNECTOR	20P
J 326	1	PS30PAD4T1A1	CONNECTOR	30PP
J 329	1	HLEM10R-1	CONNECTOR:PIN	10P
J 330	1	EMCS1050Z	CONNECTOR	10P L=200MM
L 650	1	3L0004	FERRITE CORE	
L 651	1	3L0004	FERRITE CORE	
L 652	1	3L0004	FERRITE CORE	
MP	1	4G702771-0F	P5610A INSULATION:PCB-1	
Q 1021	1	2SD969-RS	TSTR:SI NPN	PC:250MW VBEO:15V
Q 1022	1	2SB790-RS	TSTR:SI PNP	PC:600MW FT:150MHZ
Q 1210	1	2SD1273-Q	TSTR:SI NPN	80V 2W FT 50
Q 1211	1	2SC828A-RS	TSTR:SI NPN	PC:250MW FT:220MHZ
Q 1213	1	2SC828A-RS	TSTR:SI NPN	PC:250MW FT:220MHZ

P5610A ANALOG-2 DWG NO 4G205547

T NO	QTY	PART NO	DESCRIPTION	
612	1	TM64K2PV2-15	R:VAR CERMET	100K OHM 20%
651	1	ERD25TJ153V	R:FXD CARBON	15K OHM 5% 1/4W
652	1	TM64K2PV2-14	R:VAR CERMET	10K OHM 20%
653	1	ERD10TJ221	R:FXD CARBON	220 OHM 5% 1/8W
654	1	ERD10TJ221	R:FXD CARBON	220 OHM 5% 1/8W
656	1	ERD10TJ102	R:FXD CARBON	1K OHM 5% 1/8W
657	1	ERD10TJ102	R:FXD CARBON	1K OHM 5% 1/8W
658	1	ERD10TJ102	R:FXD CARBON	1K OHM 5% 1/8W
659	1	ERD10TJ102	R:FXD CARBON	1K OHM 5% 1/8W
660	1	ERD10TJ102	R:FXD CARBON	1K OHM 5% 1/8W
661	1	ERD10TJ102	R:FXD CARBON	1K OHM 5% 1/8W
662	1	ERD10TJ102	R:FXD CARBON	1K OHM 5% 1/8W
662	1	ERD25TJ333V	R:FXD CARBON	33K OHM 5% 1/4W
663	1	ERD10TJ102	R:FXD CARBON	1K OHM 5% 1/8W
664	1	ERD25TJ472V	R:FXD CARBON	4.7K OHM 5% 1/4W
1025	1	ERD25TJ104V	R:FXD CARBON	100K OHM 5% 1/4W
1028	1	ERD25TJ513V	R:FXD CARBON	51K OHM 5% 1/4W
1247	1	ERD25TJ204V	R:FXD CARBON	200K OHM 5% 1/4W
1276	1	ERD25TJ511V	R:FXD CARBON	510 OHM 5% 1/4W
1278	1	ERD25TJ104V	R:FXD CARBON	100K OHM 5% 1/4W
1280	1	ERD25TJ473V	R:FXD CARBON	47K OHM 5% 1/4W
1281	1	ERD25TJ223V	R:FXD CARBON	22K OHM 5% 1/4W
1282	1	ERD25TJ123V	R:FXD CARBON	12K OHM 5% 1/4W
1283	1	ERD10TJ622	R:FXD CARBON	6.2K OHM 5% 1/8W
1284	1	ERD25TJ103V	R:FXD CARBON	10K OHM 5% 1/4W
1285	1	ERD25TJ153V	R:FXD CARBON	15K OHM 5% 1/4W
1286	1	ERD25TJ682V	R:FXD CARBON	6.8K OHM 5% 1/4W
1310	1	ERD25TJ103V	R:FXD CARBON	10K OHM 5% 1/4W
1327	1	ERD25TJ102V	R:FXD CARBON	1K OHM 5% 1/4W
646	1	TL081CP	IC:OP AMP	BI-FET
647	1	DAC1008	IC:C MOS	10 BIT D/A +10V--10V
648	1	CMOS4094BP	IC:C MOS	8-STAGE BUS REGISTER
649	1	CMOS4094BP	IC:C MOS	8-STAGE BUS REGISTER
655	1	TC40H164P	IC:C MOS	8-BIT SHIFT REGISTER
1201	1	CMOS4094BP	IC:C MOS	8-STAGE BUS REGISTER
1202	1	TC40H164P	IC:C MOS	8-BIT SHIFT REGISTER
1203	1	UPD4051BC	IC:C MOS	SINGLE 8-CH MUX/DEMUX
310	1	75A007	FUSE CLIP	
311	1	75A007	FUSE CLIP	

P5610A PANEL-3 DWG NO 4G205548

REF NO	QTY	PART NO	DESCRIPTION	
C 301	1	ECV1ZW20X60	C:VAR CER	20PF
C 302	1	ECV1ZW10X60	C:VAR CER	10PF
C 303	1	ECCF1H020CC	C:FXD CER TC	2PF +-0.25PF 50V NPO
C 311	1	ECV1ZW20X60	C:VAR CER	20PF
C 312	1	ECV1ZW10X60	C:VAR CER	10PF
C 314	1	ECCF1H220KC	C:FXD CER TC	22PF +-10% 50V NPO
C 322	1	ECCF1H050DC	C:FXD CER TC	5PF +-0.5PF 50V NPO
C 1030	1	ECEA1CKS100E	C:FXD AL ELECT	10UF +-20% 16V
C 1031	1	ECEA1CKS100E	C:FXD AL ELECT	10UF +-20% 16V
C 1032	1	ECEA1CKS100E	C:FXD AL ELECT	10UF +-20% 16V
C 1201	1	ECQP1103FZ	C:FXD FLM	0.01UF 1% 100V
C 1202	1	ECQP1103FZ	C:FXD FLM	0.01UF 1% 100V
C 1207	1	ECEA1CKS100E	C:FXD AL ELECT	10UF +-20% 16V
C 1258	1	ECV1ZW20X53T	C:VAR CER	20PF
CR 310	1	MA150TA	DIODE:SI	100MA 35V
CR 1201	1	MA150TA	DIODE:SI	100MA 35V
CR 1202	1	MA150TA	DIODE:SI	100MA 35V
CR 1203	1	MA150TA	DIODE:SI	100MA 35V
CR 1204	1	MA150TA	DIODE:SI	100MA 35V
CR 1205	1	MA150TA	DIODE:SI	100MA 35V
E	1	2G401490-2	P5610A PANEL-3 PC BOARD	
J	4	48051	CONNECTOR	PV TERMINAL (REEL TYPE)
J	2	65039-032	CONNECTOR	LATCH HOUSING 5P
J	2	65039-033	CONNECTOR	LATCH HOUSING 4P
J	1	65039-034	CONNECTOR	LATCH HOUSING 3P
J	7	65039-035	CONNECTOR	LATCH HOUSING 2P
J	2	65501-202	CONNECTOR:PIN	2P ANGLE TYPE
J	1	65532-102	CONNECTOR:PIN	2P ANGLE TYPE
J 401	1	UG625UNI	CONNECTOR:COAX	BNC PANEL JACK
J 411	1	84J08	CONNECTOR	BNC154
J 413	1	HLEM20R-1	CONNECTOR:PIN	20P
J 414	1	4G470932	CONNECTOR	
J 415	1	4G470932	CONNECTOR	
J 416	1	4G470932	CONNECTOR	
J 417	1	PS10SDD4T1-1	CONNECTOR	30P
J 418	1	PS10SDD4T1-1	CONNECTOR	30P
J 419	1	PS10SDD4T1-1	CONNECTOR	30P
J 431	1	84J08	CONNECTOR	BNC154
MP 391	1	4G617537-0BB	P5610A BRACKET:VR-2	
MP 392	1	4G617538-0BB	P5610A BRACKET:VR-3	
MP 393	1	4G617539-0BB	P5610A BRACKET:VR-4	
MP 394	1	4G617511-1C	P5610A SHIELD:HEAD AMP	

P5610A PANEL-3 DWG NO 4G205548

NO	QTY	PART NO	DESCRIPTION	
395	1	4G644588-1AB	NUT:M7-2.5X0.75MM	
396	1	4G644588-1AB	NUT:M7-2.5X0.75MM	
397	1	4G644588-1AB	NUT:M7-2.5X0.75MM	
398	1	4G644588-1AB	NUT:M7-2.5X0.75MM	
399	1	4G644588-1AB	NUT:M7-2.5X0.75MM	
400	1	4G644588-1AB	NUT:M7-2.5X0.75MM	
401	1	4G644588-1AB	NUT:M7-2.5X0.75MM	
402	1	4G644588-1AB	NUT:M7-2.5X0.75MM	
403	1	4G644588-1AB	NUT:M7-2.5X0.75MM	
111	1	TM64K2PH-54	R:VAR CERMET	50K OHM 20%
112	1	ERD25TJ153V	R:FXD CARBON	15K OHM 5% 1/4W
112	1	EVUKBBF15B15	R VARIABLE CARBON	100K OHM +-20%
113	1	ERD10TJ433	R:FXD CARBON	43K OHM 5% 1/8W
114	1	ERD10TJ473	R:FXD CARBON	47K OHM 5% 1/8W
115	1	ERD25TJ243V	R:FXD CARBON	24K OHM 5% 1/4W
116	1	ERD10TJ102	R:FXD CARBON	1K OHM 5% 1/8W
151	1	TM64K2PH-13	R:VAR CERMET	1K OHM 20%
153	1	ERD10TJ102	R:FXD CARBON	1K OHM 5% 1/8W
154	1	TM64K2PH-54	R:VAR CERMET	50K OHM 20%
155	1	ERD10TJ103	R:FXD CARBON	10K OHM 5% 1/8W
155	1	ERD10TJ123	R:FXD CARBON	12K OHM 5% 1/8W
211	1	TM64K2PH-54	R:VAR CERMET	50K OHM 20%
212	1	ERD25TJ153V	R:FXD CARBON	15K OHM 5% 1/4W
212	1	EVUKBBF15B15	R VARIABLE CARBON	100K OHM +-20%
213	1	ERD10TJ433	R:FXD CARBON	43K OHM 5% 1/8W
214	1	ERD10TJ473	R:FXD CARBON	47K OHM 5% 1/8W
215	1	ERD25TJ243V	R:FXD CARBON	24K OHM 5% 1/4W
216	1	ERD10TJ102	R:FXD CARBON	1K OHM 5% 1/8W
251	1	ERD10TJ391	R:FXD CARBON	390 OHM 5% 1/8W
252	1	ERD10TJ391	R:FXD CARBON	390 OHM 5% 1/8W
254	1	TM64K2PH-13	R:VAR CERMET	1K OHM 20%
255	1	ERD10TJ123	R:FXD CARBON	12K OHM 5% 1/8W
301	1	ERD25TJ220V	R:FXD CARBON	22 OHM 5% 1/4W
302	1	ERD10TJ220	R:FXD CARBON	22 OHM 5% 1/8W
303	1	ERO50CKF4993	R:FXD MET FLM	499K OHM 1% 1/2W
304	1	ERO50CKF1004	R:FXD MET FLM	1M OHM 1% 1/2W
305	1	TM64K2PH-22	R:VAR CERMET	200 OHM 20%
306	1	ERD10TJ100	R:FXD CARBON	10 OHM 5% 1/8W
306	1	ERD10TJ510	R:FXD CARBON	51 OHM 5% 1/8W
308	1	ERD10TJ133	R:FXD CARBON	13K OHM 5% 1/8W
312	1	ERD10TJ220	R:FXD CARBON	22 OHM 5% 1/8W
313	1	ERO50CKF9003	R:FXD MET FLM	900K OHM 1% 1/2W
314	1	ERO25CKF1113	R:FXD MET FLM	111K OHM 1% 1/4W
315	1	ERD10TJ101	R:FXD CARBON	100 OHM 5% 1/8W

P5610A PANEL-3 DWG NO 4G205548

REF NO	QTY	PART NO	DESCRIPTION	
R 316	1	ERD10TJ470	R:FXD CARBON	47 OHM 5% 1/8W
R 318	1	ERD10TJ391	R:FXD CARBON	390 OHM 5% 1/8W
R 318	1	ERD10TJ473	R:FXD CARBON	47K OHM 5% 1/8W
R 319	1	ERD10TJ391	R:FXD CARBON	390 OHM 5% 1/8W
R 320	1	EVURGA013B15	R VARIABLE CARBON	100K OHM +-20%
R 321	1	TM64K2PH-15	R:VAR CERMET	100K OHM 20%
R 322	1	ERD10TJ361	R:FXD CARBON	360 OHM 5% 1/8W
R 323	1	ERD10TJ101	R:FXD CARBON	100 OHM 5% 1/8W
R 324	1	ERD10TJ4R7	R:FXD CARBON	4.7 OHM 5% 1/8
R 325	1	ERD10TJ4R7	R:FXD CARBON	4.7 OHM 5% 1/8
R 335	1	TM64K2PH-52	R:VAR CERMET	500 OHM 20%
R 336	1	ERD10TJ510	R:FXD CARBON	51 OHM 5% 1/8W
R 416	1	ERD25TJ4R7V	R:FXD CARBON	4.7 OHM 5% 1/4W
R 416	1	ERD25TJ750V	R:FXD CARBON	75 OHM 5% 1/4W
R 420	1	EXBP88473M	R:NETWORK	47K OHM X8 +-20% 1/8W
R 802	1	TM64K2PH-15	R:VAR CERMET	100K OHM 20%
R 805	1	EVUKCBF15B15	R VARIABLE CARBON	100K OHM +-20%
R 806	1	EVUKBBF15B15	R VARIABLE CARBON	100K OHM +-20%
R 810	1	ERD10TJ473	R:FXD CARBON	47K OHM 5% 1/8W
R 811	1	ERD10TJ392	R:FXD CARBON	3.9K OHM 5% 1/8W
R 1022	1	EVURGA205B15	R VARIABLE CARBON	100K OHM +-20%
R 1029	1	TM64K2PH-12	R:VAR CERMET	100 OHM 20%
R 1031	1	ERD25TJ4R7V	R:FXD CARBON	4.7 OHM 5% 1/4W
R 1032	1	ERD25TJ4R7V	R:FXD CARBON	4.7 OHM 5% 1/4W
R 1050	1	ERD25TJ473V	R:FXD CARBON	47K OHM 5% 1/4W
R 1205	1	EVURGA013B15	R VARIABLE CARBON	100K OHM +-20%
R 1206	1	EVURGA013B15	R VARIABLE CARBON	100K OHM +-20%
R 1210	1	EVURGA013B15	R VARIABLE CARBON	100K OHM +-20%
R 1316	1	ERD10TJ222	R:FXD CARBON	2.2K OHM 5% 1/8W
R 1338	1	TM64K2PV2-12	R:VAR CERMET	100 OHM 20%
R 1339	1	TM64K2PV2-22	R:VAR CERMET	200 OHM 20%
R 1340	1	TM64K2PH-14	R:VAR CERMET	10K OHM 20%
S	1	DR-KR10H	SLIDE SW	DC 30V 0.3A
S 411	1	4G410707	SRAID SWICH	SSB022
S 412	1	4G410705	ROTARY SWICH	MR-K403
U 111	1	UPC251C	IC:OP AMP	
U 301	1	GK2419B	IC:HYBRID CH3 AMP	RF.AMP
U 1201	1	GK2415B	IC:HYBRID CAL	RF.AMP

P5610A CHARACTER DWG NO 4G205549

C' NO	QTY	PART NO	DESCRIPTION	
1401	1	ECKF1H221KB	C:FXD CER HI-K	220PF +-10% 50V
1501	1	ECKF1H271KB	C:FXD CER HI-K	270PF +-10% 50V
1502	1	ECKF1H102KB	C:FXD CER HI-K	1000PF +-10% 50V
1503	1	ECEA1HKSR47	C:FXD AL ELECT	0.47UF +-20% 50V
1504	1	ECKF1H181KB	C:FXD CER HI-K	180PF +-10% 50V
1506	1	ECKF1H181KB	C:FXD CER HI-K	180PF +-10% 50V
1507	1	ECKF1H103ZF	C:FXD CER HI-K	10000PF +80-20% 50V
1508	1	ECEA1CKS100E	C:FXD AL ELECT	10UF +-20% 16V
1509	1	ECKF1H103ZF	C:FXD CER HI-K	10000PF +80-20% 50V
1510	1	ECEA1CKS100E	C:FXD AL ELECT	10UF +-20% 16V
1511	1	ECKF1H103ZF	C:FXD CER HI-K	10000PF +80-20% 50V
1512	1	ECEA1CKS100E	C:FXD AL ELECT	10UF +-20% 16V
1513	1	ECKF1H103ZF	C:FXD CER HI-K	10000PF +80-20% 50V
1514	1	ECEA1CKS100E	C:FXD AL ELECT	10UF +-20% 16V
1515	1	ECKF1H102KB	C:FXD CER HI-K	1000PF +-10% 50V
1516	1	ECKF1H102KB	C:FXD CER HI-K	1000PF +-10% 50V
1517	1	ECEA1CKS100E	C:FXD AL ELECT	10UF +-20% 16V
1518	1	ECEA1CKS100E	C:FXD AL ELECT	10UF +-20% 16V
1519	1	ECEA1CKS100E	C:FXD AL ELECT	10UF +-20% 16V
1520	1	ECEA1CKS100E	C:FXD AL ELECT	10UF +-20% 16V
1521	1	ECEA1CKS100E	C:FXD AL ELECT	10UF +-20% 16V
1522	1	ECEA1CKS100E	C:FXD AL ELECT	10UF +-20% 16V
1523	1	ECEA1CKS100E	C:FXD AL ELECT	10UF +-20% 16V
1524	1	ECEA1CKS100E	C:FXD AL ELECT	10UF +-20% 16V
1526	1	ECEA1CKS100E	C:FXD AL ELECT	10UF +-20% 16V
1527	1	ECEA1CKS100E	C:FXD AL ELECT	10UF +-20% 16V
1528	1	ECEA1CKS100E	C:FXD AL ELECT	10UF +-20% 16V
1529	1	ECKF1H102KB	C:FXD CER HI-K	1000PF +-10% 50V
1530	1	ECKF1H103ZF	C:FXD CER HI-K	10000PF +80-20% 50V
1401	1	MA150TA	DIODE:SI	100MA 35V
	1	65529-203	CONNECTOR:PIN	3P ANGLE TYPE
	1	65529-205	CONNECTOR:PIN	5P ANGLE TYPE
1501	1	65533-102		
1502	1	PS10SDD4T1-1	CONNECTOR	30P
1503	1	PS10SDD4T1-1	CONNECTOR	30P
1504	1	4G470917	P5610A CONNECTOR	PS-20PA-D4LT1-A1
1506	1	65533-105		
1510	1	ELEH5R6KA	COIL:CHOKE	5.6UH 10%
1512	1	ELEH5R6KA	COIL:CHOKE	5.6UH 10%
1501	1	2SC2901	TSTR:SI NPN	PC:600MW FT:750MHZ
1502	1	2SC2901	TSTR:SI NPN	PC:600MW FT:750MHZ
1503	1	2SC1359-C	TSTR:SI NPN	PC:250MW FT:300MHZ

P5610A CHARACTER DWG NO 4G205549

REF NO	QTY	PART NO	DESCRIPTION	
Q 1504	1	2SC1359-C	TSTR:SI NPN	PC:250MW FT:300MHZ
Q 1505	1	2SC828A-RS	TSTR:SI NPN	PC:250MW FT:220MHZ
Q 1510	1	2SC2188	TSTR:SI NPN	
R 1401	1	ERD25TJ102V	R:FXD CARBON	1K OHM 5% 1/4W
R 1501	1	ERD25TJ122V	R:FXD CARBON	1.2K OHM 5% 1/4W
R 1502	1	ERD25TJ471V	R:FXD CARBON	470 OHM 5% 1/4W
R 1503	1	ERD25TJ103V	R:FXD CARBON	10K OHM 5% 1/4W
R 1504	1	ERD25TJ103V	R:FXD CARBON	10K OHM 5% 1/4W
R 1505	1	ERD25TJ472V	R:FXD CARBON	4.7K OHM 5% 1/4W
R 1506	1	ERD25TJ472V	R:FXD CARBON	4.7K OHM 5% 1/4W
R 1507	1	ERD25TJ330V	R:FXD CARBON	33 OHM 5% 1/4W
R 1508	1	ERD25TJ102V	R:FXD CARBON	1K OHM 5% 1/4W
R 1509	1	ERD25TJ472V	R:FXD CARBON	4.7K OHM 5% 1/4W
R 1510	1	ERD25TJ472V	R:FXD CARBON	4.7K OHM 5% 1/4W
R 1511	1	ERD25TJ392V	R:FXD CARBON	3.9K OHM 5% 1/4W
R 1512	1	EXBLD8103G	R:NETWORK	10K OHM X4 +-5% 1/8W
R 1515	1	ERD25TJ102V	R:FXD CARBON	1K OHM 5% 1/4W
R 1516	1	ERD25TJ102V	R:FXD CARBON	1K OHM 5% 1/4W
R 1517	1	EXBLD8103G	R:NETWORK	10K OHM X4 +-5% 1/8W
R 1522	1	ERD25TJ273V	R:FXD CARBON	27K OHM 5% 1/4W
R 1523	1	ERD25TJ912V	R:FXD CARBON	9.1K OHM 5% 1/4W
R 1524	1	ERD25TJ181V	R:FXD CARBON	180 OHM 5% 1/4W
R 1526	1	ERD25TJ181V	R:FXD CARBON	180 OHM 5% 1/4W
R 1539	1	TM64K2PH-54	R:VAR CERMET	50K OHM 20%
R 1541	1	TM64K2PH-54	R:VAR CERMET	50K OHM 20%
R 1542	1	ERD25TJ333V	R:FXD CARBON	33K OHM 5% 1/4W
R 1543	1	ERD25TJ102V	R:FXD CARBON	1K OHM 5% 1/4W
R 1544	1	ERD25TJ512V	R:FXD CARBON	5.1K OHM 5% 1/4W
R 1555	1	ERD25TJ152V	R:FXD CARBON	1.5K OHM 5% 1/4W
R 1556	1	ERD25TJ512V	R:FXD CARBON	5.1K OHM 5% 1/4W
R 1557	1	TM64K2PH-53	R:VAR CERMET	5K OHM 20%
R 1558	1	ERD25TJ473V	R:FXD CARBON	47K OHM 5% 1/4W
R 1559	1	ERD25TJ472V	R:FXD CARBON	4.7K OHM 5% 1/4W
R 1561	1	ERO25CKF5230	R:FXD MET FLM	523 OHM 1% 1/4W
R 1562	1	ERO25CKF5230	R:FXD MET FLM	523 OHM 1% 1/4W
R 1563	1	ERO25CKF1581	R:FXD MET FLM	1.58K OHM 1% 1/4W
R 1564	1	ERO25CKF1581	R:FXD MET FLM	1.58K OHM 1% 1/4W
R 1565	1	ERO25CKF8250	R:FXD MET FLM	825 OHM 1% 1/4W
R 1566	1	TM64K2PH-52	R:VAR CERMET	500 OHM 20%
R 1567	1	ERD25TJ122V	R:FXD CARBON	1.2K OHM 5% 1/4W
R 1568	1	ERD25TJ362V	R:FXD CARBON	3.6K OHM 5% 1/4W
R 1570	1	ERD25TJ622V	R:FXD CARBON	6.2K OHM 5% 1/4W
R 1571	1	ERD10TJ331	R:FXD CARBON	330 OHM 5% 1/8W

P5610A CHARACTER DWG NO 4G205549

NO	QTY	PART NO	DESCRIPTION	
1572	1	ERD10TJ331	R:FXD CARBON	330 OHM 5% 1/8W
1574	1	ERD25TJ101V	R:FXD CARBON	100 OHM 5% 1/4W
1575	1	ERD10TJ473	R:FXD CARBON	47K OHM 5% 1/8W
1503	1	UPD4016C1	IC:N MOS	2K X8 STATIC RAM 250NS
1504	1	UPD2716D	IC:N MOS	2K X8 EPROM
1505	1	SN74LS112AN	IC:TTL LS	DUAL J-K FLIP-FLOP
1506	1	TC40H000P	IC:C MOS	QUAD 2-INPUT NAND GATE
1507	1	TL081CP	IC:OP AMP	BI-FET
1508	1	TC40H004P	IC:C MOS	QUAD 2-INPUT NAND GATE
1509	1	TL081CP	IC:OP AMP	BI-FET
1510	1	TC40H010P	IC:C MOS	TRIPLE 3-INPUT NAND GATE
1511	1	TC40H393P	IC:C MOS	DUAL BINARY COUNTER
1512	1	TC40H393P	IC:C MOS	DUAL BINARY COUNTER
1513	1	TC74HC244P	IC:C MOS	OCTAL BUS BUFFER
1514	1	TC74HC00P	IC:C MOS	NAND GATE
1515	1	TC40H374P	IC:C MOS	OCTAL D-TYPE F-F 3-STATE
1516	1	TC40H374P	IC:C MOS	OCTAL D-TYPE F-F 3-STATE
1517	1	TC40H393P	IC:C MOS	DUAL BINARY COUNTER
1518	1	TC40H174P	IC:C MOS	HEX D-TYPE FLIP-FLOP
1519	1	TC74HC00P	IC:C MOS	NAND GATE
1520	1	TC40H000P	IC:C MOS	QUAD 2-INPUT NAND GATE
1521	1	TC74HC374P	IC:C MOS	OCTAL D-TYPE F-F 3-STATE
1510	1	RD5.6EB3	DIODE:ZENER	5.7V 500MW
1501	1	DILB24P-8J	IC SOCKET	24-PIN DIL

P5610A CPU BOARD DWG NO 4G205550

REF NO	QTY	PART NO	DESCRIPTION	
BT 1400	1	BR2325lHC	BATTERY:LITHIUM	3V 160MAH
C 1401	1	ECEA1CKS100E	C:FXD AL ELECT	10UF +-20% 16V
C 1402	1	ECEA1CKS100E	C:FXD AL ELECT	10UF +-20% 16V
C 1403	1	ECEA1CKS100E	C:FXD AL ELECT	10UF +-20% 16V
C 1404	1	ECEA1CKS100E	C:FXD AL ELECT	10UF +-20% 16V
C 1405	1	ECEA1CKS100E	C:FXD AL ELECT	10UF +-20% 16V
C 1406	1	ECEA1CKS100E	C:FXD AL ELECT	10UF +-20% 16V
C 1407	1	ECEA0JKS220E		
C 1409	1	ECCF1H470K	C:FXD CER TC	47PF +-10% 50V SL
C 1410	1	ECCF1H470K	C:FXD CER TC	47PF +-10% 50V SL
C 1411	1	EXF-P4103ZW	R:NETWORK	1/8W 10K OHM X4 +-10%
C 1412	1	EXF-P4103ZW	R:NETWORK	1/8W 10K OHM X4 +-10%
C 1413	1	ECKF1H103ZF	C:FXD CER HI-K	10000PF +80-20% 50V
C 1414	1	ECKF1H103ZF	C:FXD CER HI-K	10000PF +80-20% 50V
C 1415	1	ECEA1CKS100E	C:FXD AL ELECT	10UF +-20% 16V
C 1416	1	ECEA0JKS220E		
CR 1401	1	MA165	DIODE:SI	75V 100MA
CR 1402	1	MA165	DIODE:SI	75V 100MA
CR 1403	1	MA165	DIODE:SI	75V 100MA
CR 1404	1	MA165	DIODE:SI	75V 100MA
CR 1405	1	MA165	DIODE:SI	75V 100MA
CR 1406	1	MA165	DIODE:SI	75V 100MA
CR 1407	1	MA165	DIODE:SI	75V 100MA
CR 1408	1	MA165	DIODE:SI	75V 100MA
E		3G401443-2	P5610A CPU PC BOARD	
J	2	65529-203	CONNECTOR:PIN	3P ANGLE TYPE
J	1	65529-204	CONNECTOR:PIN	4P ANGLE TYPE
J 1401	1	559727APB	CONNECTOR:PIN	27P
J 1402	1	PS10SDD4T1-1	CONNECTOR	30P
J 1403	1	4G470917	P5610A CONNECTOR	-PS-20PA-D4LT1-A1
J 1409	1	PS30SDD4T1-1	CONNECTOR	30PP
L 1400	1	ELEBF2R2KA	COIL:CHOKE	2.2UH 20%
L 1401	1	ELEPG5R6MA	COIL:CHOKE	5.6UH 10%
Q 1401	1	2SC828A-RS	TSTR:SI NPN	PC:250MW FT:220MHZ
Q 1402	1	2SC2188	TSTR:SI NPN	
Q 1403	1	2SC828A-RS	TSTR:SI NPN	PC:250MW FT:220MHZ
R 1398	1	ERD10TJ472	R:FXD CARBON	4.7K OHM 5% 1/8W
R 1399	1	ERD10TJ472	R:FXD CARBON	4.7K OHM 5% 1/8W
R 1401	1	ERD10TJ104	R:FXD CARBON	100K OHM 5% 1/8W
R 1402	1	ERD10TJ103	R:FXD CARBON	10K OHM 5% 1/8W
R 1403	1	ERD10TJ472	R:FXD CARBON	4.7K OHM 5% 1/8W

P5610A CPU BOARD DWG NO 4G205550

NO	QTY	PART NO	DESCRIPTION	
1404	1	ERD10TJ103	R:FXD CARBON	10K OHM 5% 1/8W
1405	1	ERD10TJ103	R:FXD CARBON	10K OHM 5% 1/8W
1406	1	ERD10TJ103	R:FXD CARBON	10K OHM 5% 1/8W
1407	1	EXBF8V331G	R:NETWORK	330 OHM X4 +-5% 1/4W
1408	1	EXBF8V331G	R:NETWORK	330 OHM X4 +-5% 1/4W
1410	1	ERD10TJ101	R:FXD CARBON	100 OHM 5% 1/8W
1414	1	ERD10TJ472	R:FXD CARBON	4.7K OHM 5% 1/8W
1415	1	ERD10TJ472	R:FXD CARBON	4.7K OHM 5% 1/8W
1416	1	ERD10TJ472	R:FXD CARBON	4.7K OHM 5% 1/8W
1417	1	ERD10TJ103	R:FXD CARBON	10K OHM 5% 1/8W
1418	1	EXBP88103J	R:NETWORK	10K OHM X8 5% 1/8W
1426	1	ERD10TJ102	R:FXD CARBON	1K OHM 5% 1/8W
1426	1	ERD10TJ392	R:FXD CARBON	3.9K OHM 5% 1/8W
1427	1	ERD10TJ102	R:FXD CARBON	1K OHM 5% 1/8W
1428	1	ERD10TJ102	R:FXD CARBON	1K OHM 5% 1/8W
1429	1	ERD10TJ102	R:FXD CARBON	1K OHM 5% 1/8W
1430	1	ERD10TJ102	R:FXD CARBON	1K OHM 5% 1/8W
1431	1	ERD10TJ102	R:FXD CARBON	1K OHM 5% 1/8W
1432	1	ERD10TJ102	R:FXD CARBON	1K OHM 5% 1/8W
1434	1	ERD10TJ122	R:FXD CARBON	1.2K OHM 5% 1/8W
1401	1	TC40H004P	IC:C MOS	QUAD 2-INPUT NAND GATE
1403	1	TC40H000P	IC:C MOS	QUAD 2-INPUT NAND GATE
1407	1	TC40H139P	IC:C MOS	DUAL 2-TO-4 DECODER
1411	1	SN74LS12N	IC:TTL LS	TRI 3-1N NAND GATE O/C
1414	1	MSM80C85ARS	IC:C MOS	UCPU
1415	1	TC40H373P	IC:C MOS	
1416	1	TC74HC154P	IC:C MOS	4-TO-16-LINE
1418	1	HN4827128G	IC:N MOS	16K X8 EPROM
1419	1	TC40H011P		
1420	1	TC40H002P	IC:C MOS	QUAD 2-INPUT NOR GATE
1421	1	TC40H138P	IC:C MOS	3-TO-8 LINE DECODER
1422	1	TC40H373P	IC:C MOS	
1426	1	UPD446C	IC:C MOS	2KX8 STATIC RAM 200NS
1427	1	TC40H174P	IC:C MOS	HEX D-TYPE FLIP-FLOP
1428	1	TC40H373P	IC:C MOS	
1430	1	TC40H373P	IC:C MOS	
1401	1	RD5.6EB3	DIODE:ZENER	5.7V 500MW
1404	1	DILB28P-8J	IC SOCKET	28-PIN DIL
1405	1	DILB40P-8J	IC SOCKET	40-PIN DIL
1408	1	EFOA5ROM03A2	CERAMIC OSC	5MHZ +-0.5%

P5610A PANEL-1 DWG NO 4G205551

REF NO	QTY	PART NO	DESCRIPTION	
CR 1301	1	LN322GP	LED	GREEN
CR 1302	1	HLMP0401	LED	YELLOW
CR 1303	1	HLMP0401	LED	YELLOW
CR 1304	1	HLMP0401	LED	YELLOW
CR 1305	1	HLMP0401	LED	YELLOW
CR 1306	1	HLMP0401	LED	YELLOW
CR 1307	1	HLMP0401	LED	YELLOW
CR 1308	1	HLMP0401	LED	YELLOW
CR 1309	1	HLMP0401	LED	YELLOW
CR 1310	1	HLMP0401	LED	YELLOW
CR 1311	1	HLMP0401	LED	YELLOW
CR 1312	1	HLMP0401	LED	YELLOW
CR 1313	1	HLMP0401	LED	YELLOW
CR 1314	1	HLMP0401	LED	YELLOW
J 1310	1	1-331677-0	CONNECTOR:PIN	1P
J 1311	1	1-331677-0	CONNECTOR:PIN	1P
MP 411	1	3G760564-1W	P5610A HOLDER:LED	
MP 412	1	4G617488-0CB	P5610A HOLDER:VR	
MP 413	1	4G617488-0CB	P5610A HOLDER:VR	
MP 414	1	4G617488-0CB	P5610A HOLDER:VR	
MP 415	1	4G617488-0CB	P5610A HOLDER:VR	
R 1345	1	EVUKGA013B53	R VARIABLE CARBON	5K OHM +-20%
R 1346	1	EVUKGA013B53	R VARIABLE CARBON	5K OHM +-20%
R 1347	1	EVUKGA013B54	R VARIABLE CARBON	50K OHM +-20%
R 1348	1	EVUKGA013B54	R VARIABLE CARBON	50K OHM +-20%
S 1301	1	84S09	P5610A LEVER SW	28V 0.1A
S 1302	1	84S09	P5610A LEVER SW	28V 0.1A
S 1303	1	84S09	P5610A LEVER SW	28V 0.1A
S 1304	1	84S09	P5610A LEVER SW	28V 0.1A
S 1305	1	KHQ11908	TACT SW	12V 50MA
S 1306	1	KHQ11908	TACT SW	12V 50MA
S 1307	1	KHQ11908	TACT SW	12V 50MA
S 1308	1	KHQ11908	TACT SW	12V 50MA
S 1309	1	KHQ11908	TACT SW	12V 50MA
S 1310	1	KHQ11908	TACT SW	12V 50MA
S 1311	1	KHQ11908	TACT SW	12V 50MA
S 1312	1	KHQ11908	TACT SW	12V 50MA
S 1313	1	KHQ11908	TACT SW	12V 50MA
S 1314	1	KHQ11908	TACT SW	12V 50MA
S 1315	1	KHQ11908	TACT SW	12V 50MA
S 1316	1	KHQ11908	TACT SW	12V 50MA
S 1317	1	KHQ11908	TACT SW	12V 50MA
S 1318	1	KHQ11908	TACT SW	12V 50MA

P5610A PANEL-1 DWG NO 4G205551

NO	QTY	PART NO	DESCRIPTION	
1319	1	KHQ11908	TACT SW	12V 50MA
1320	1	KHQ11908	TACT SW	12V 50MA
1321	1	KHQ11908	TACT SW	12V 50MA
1322	1	KHQ11908	TACT SW	12V 50MA
1323	1	KHQ11908	TACT SW	12V 50MA
1324	1	KHQ11908	TACT SW	12V 50MA
1325	1	KHQ11908	TACT SW	12V 50MA
1326	1	KHQ11908	TACT SW	12V 50MA
1327	1	KHQ11908	TACT SW	12V 50MA
1328	1	KHQ11908	TACT SW	12V 50MA
1329	1	KHQ11908	TACT SW	12V 50MA
1330	1	KHQ11908	TACT SW	12V 50MA
1331	1	KHQ11908	TACT SW	12V 50MA
1332	1	KHQ11908	TACT SW	12V 50MA
1333	1	KHQ11908	TACT SW	12V 50MA
1334	1	KHQ11908	TACT SW	12V 50MA
1335	1	EWTXCE23316B	ROTARY ENCODER	10V 3MA

P5610A PANEL-2 DWG NO 4G205552

REF NO	QTY	PART NO	DESCRIPTION	
C 1301	1	ECEB1CK100	C:FXD AL ELECT	10UF +-20% 16V
E 1302	1	3G401406-2	P5610A PANEL-2 PC BOARD	
J 1301	1	HLEM27R-1	CONNECTOR:PIN	27P
L 1301	1	3L0004	FERRITE CORE	
R 1302	1	ERD10TJ331	R:FXD CARBON	330 OHM 5% 1/8W
R 1303	1	ERD10TJ331	R:FXD CARBON	330 OHM 5% 1/8W
R 1304	1	ERD10TJ331	R:FXD CARBON	330 OHM 5% 1/8W
R 1305	1	ERD10TJ331	R:FXD CARBON	330 OHM 5% 1/8W
R 1306	1	ERD10TJ331	R:FXD CARBON	330 OHM 5% 1/8W
R 1307	1	ERD10TJ331	R:FXD CARBON	330 OHM 5% 1/8W
R 1308	1	ERD10TJ331	R:FXD CARBON	330 OHM 5% 1/8W
R 1309	1	ERD10TJ331	R:FXD CARBON	330 OHM 5% 1/8W
R 1310	1	ERD10TJ331	R:FXD CARBON	330 OHM 5% 1/8W
R 1311	1	ERD10TJ331	R:FXD CARBON	330 OHM 5% 1/8W
R 1312	1	ERD10TJ331	R:FXD CARBON	330 OHM 5% 1/8W
R 1313	1	ERD10TJ331	R:FXD CARBON	330 OHM 5% 1/8W
R 1314	1	ERD10TJ331	R:FXD CARBON	330 OHM 5% 1/8W
R 1315	1	ERD10TJ331	R:FXD CARBON	330 OHM 5% 1/8W
R 1316	1	ERD10TJ331	R:FXD CARBON	330 OHM 5% 1/8W
R 1317	1	ERD10TJ331	R:FXD CARBON	330 OHM 5% 1/8W
R 1318	1	ERD10TJ331	R:FXD CARBON	330 OHM 5% 1/8W
R 1319	1	ERD10TJ331	R:FXD CARBON	330 OHM 5% 1/8W
R 1320	1	ERD10TJ331	R:FXD CARBON	330 OHM 5% 1/8W
R 1321	1	ERD10TJ331	R:FXD CARBON	330 OHM 5% 1/8W
R 1322	1	ERD10TJ331	R:FXD CARBON	330 OHM 5% 1/8W
R 1323	1	ERD10TJ331	R:FXD CARBON	330 OHM 5% 1/8W
R 1324	1	ERD10TJ331	R:FXD CARBON	330 OHM 5% 1/8W
R 1325	1	ERD10TJ331	R:FXD CARBON	330 OHM 5% 1/8W
R 1326	1	ERD10TJ331	R:FXD CARBON	330 OHM 5% 1/8W
R 1327	1	ERD10TJ331	R:FXD CARBON	330 OHM 5% 1/8W
R 1328	1	ERD10TJ331	R:FXD CARBON	330 OHM 5% 1/8W
R 1329	1	ERD10TJ331	R:FXD CARBON	330 OHM 5% 1/8W
R 1330	1	ERD10TJ331	R:FXD CARBON	330 OHM 5% 1/8W
R 1331	1	ERD10TJ331	R:FXD CARBON	330 OHM 5% 1/8W
R 1332	1	ERD10TJ331	R:FXD CARBON	330 OHM 5% 1/8W
R 1333	1	ERD10TJ331	R:FXD CARBON	330 OHM 5% 1/8W
R 1334	1	ERD10TJ331	R:FXD CARBON	330 OHM 5% 1/8W
R 1335	1	ERD10TJ331	R:FXD CARBON	330 OHM 5% 1/8W
R 1336	1	ERD10TJ331	R:FXD CARBON	330 OHM 5% 1/8W
R 1337	1	ERD10TJ331	R:FXD CARBON	330 OHM 5% 1/8W
R 1338	1	ERD10TJ331	R:FXD CARBON	330 OHM 5% 1/8W

P5610A PANEL-2 DWG NO 4G205552

REF NO	QTY	PART NO	DESCRIPTION	
R 1339	1	ERD10TJ331	R:FXD CARBON	330 OHM 5% 1/8W
R 1340	1	ERD10TJ331	R:FXD CARBON	330 OHM 5% 1/8W
R 1341	1	ERD10TJ331	R:FXD CARBON	330 OHM 5% 1/8W
R 1342	1	ERD10TJ331	R:FXD CARBON	330 OHM 5% 1/8W
R 1343	1	ERD10TJ331	R:FXD CARBON	330 OHM 5% 1/8W
R 1344	1	ERD10TJ331	R:FXD CARBON	330 OHM 5% 1/8W
U 1301	1	TC74HC164P	IC:C MOS	HEX D-TIPE FLIP-FLOPS
U 1302	1	TC74HC164P	IC:C MOS	HEX D-TIPE FLIP-FLOPS
U 1303	1	TC74HC164P	IC:C MOS	HEX D-TIPE FLIP-FLOPS
U 1304	1	TC74HC164P	IC:C MOS	HEX D-TIPE FLIP-FLOPS
U 1305	1	TC74HC164P	IC:C MOS	HEX D-TIPE FLIP-FLOPS
U 1306	1	TC74HC164P	IC:C MOS	HEX D-TIPE FLIP-FLOPS

P5610A MAIN FRAME 1 DWG NO 4G205553

REF NO	QTY	PART NO	DESCRIPTION	
B 301	1	FBP04D12L	FAN MOTOR BRUSHLESS	12V 0.24A 6CM
DL	1	85W01	DELAY LINE	DELAY TIME 90NS
J	1	EMCZ1010D65V	CONNECTOR	10P L=100MM
J	1	M3115S11	CONNECTOR:PIN	15P L:100
J	92	48051	CONNECTOR	PV TERMINAL (REEL TYPE
J	28	48239	CONNECTOR	PV TERMINAL (AWG 28)
J 301	1	57-20140R	CONNECTOR:PLUG	
J 310	1	65039-032	CONNECTOR	LATCH HOUSING 5P
J 311	1	65039-032	CONNECTOR	LATCH HOUSING 5P
J 312	1	65039-032	CONNECTOR	LATCH HOUSING 5P
J 313	1	65039-032	CONNECTOR	LATCH HOUSING 5P
J 314	1	65039-032	CONNECTOR	LATCH HOUSING 5P
J 315	1	65039-032	CONNECTOR	LATCH HOUSING 5P
J 316	1	65039-032	CONNECTOR	LATCH HOUSING 5P
J 317	1	65039-033	CONNECTOR	LATCH HOUSING 4P
J 318	1	65039-033	CONNECTOR	LATCH HOUSING 4P
J 319	1	65039-033	CONNECTOR	LATCH HOUSING 4P
J 320	1	65039-033	CONNECTOR	LATCH HOUSING 4P
J 321	1	65039-034	CONNECTOR	LATCH HOUSING 3P
J 322	1	65039-034	CONNECTOR	LATCH HOUSING 3P
J 323	1	65039-034	CONNECTOR	LATCH HOUSING 3P
J 324	1	65039-034	CONNECTOR	LATCH HOUSING 3P
J 325	1	65039-034	CONNECTOR	LATCH HOUSING 3P
J 326	1	65039-034	CONNECTOR	LATCH HOUSING 3P
J 327	1	65039-034	CONNECTOR	LATCH HOUSING 3P
J 328	1	65039-034	CONNECTOR	LATCH HOUSING 3P
J 329	1	65039-035	CONNECTOR	LATCH HOUSING 2P
J 330	1	65039-035	CONNECTOR	LATCH HOUSING 2P
J 331	1	65039-035	CONNECTOR	LATCH HOUSING 2P
J 332	1	65039-035	CONNECTOR	LATCH HOUSING 2P
J 333	1	65039-035	CONNECTOR	LATCH HOUSING 2P
J 334	1	65039-035	CONNECTOR	LATCH HOUSING 2P
J 335	1	65039-035	CONNECTOR	LATCH HOUSING 2P
J 336	1	65039-035	CONNECTOR	LATCH HOUSING 2P
J 337	1	65039-035	CONNECTOR	LATCH HOUSING 2P
J 338	1	65039-035	CONNECTOR	LATCH HOUSING 2P
J 339	1	65039-035	CONNECTOR	LATCH HOUSING 2P
J 340	1	65039-035	CONNECTOR	LATCH HOUSING 2P
J 341	1	65039-035	CONNECTOR	LATCH HOUSING 2P
J 342	1	65039-035	CONNECTOR	LATCH HOUSING 2P
J 343	1	65039-035	CONNECTOR	LATCH HOUSING 2P
J 344	1	65039-035	CONNECTOR	LATCH HOUSING 2P

P5610A MAIN FRAME 1 DWG NO 4G205553

REF NO	QTY	PART NO	DESCRIPTION	
345	1	65039-035	CONNECTOR	LATCH HOUSING 2P
346	1	65039-035	CONNECTOR	LATCH HOUSING 2P
347	1	65039-035	CONNECTOR	LATCH HOUSING 2P
348	1	65039-035	CONNECTOR	LATCH HOUSING 2P
392	1	65039-032	CONNECTOR	LATCH HOUSING 5P
393	1	65039-032	CONNECTOR	LATCH HOUSING 5P
399	1	4G470918	TOP CONNECTOR	66900-020
1001	1	4G431377	ROTATION COIL A	
1001	1	2SD1273-Q	TSTR:SI NPN	80V 2W FT 50
1201	1	2SD1273-Q	TSTR:SI NPN	80V 2W FT 50
1001	1	95SB31T	CRT	3.5 INCH 100MHZ
	1	4G470936-2	CONNECTOR	20P 140MM
1201	1	4G470934	CABLE(1)	27P 270MM
1206	1	4G470938	CABLE(3)	20P 60MM
1211	1	4G470937	CABLE(4)	20P 100MM

P5610A POWER ASSY DWG NO 4G205554

REF NO	QTY	PART NO	DESCRIPTION	
C 1101	1	ECKDHS222MD	C:FXD CER HI-K	2200PF +-20% 400V
C 1102	1	ECKDHS222MD	C:FXD CER HI-K	2200PF +-20% 400V
C 1103	1	ECKDHS222MD	C:FXD CER HI-K	2200PF +-20% 400V
C 1105	1	ECEA2DG101S	C:FXD AL ELECT	160V 100UF
C 1106	1	ECEA2DG101S	C:FXD AL ELECT	160V 100UF
C 1107	1	ECEA1HG010S		
C 1108	1	ECEA1HG100S	C:FXD AL ELECT	10UF +-20% 50V
C 1109	1	ECEA1HN010S	C:FXD AL ELECT	1UF +-20% 50V
C 1110	1	ECEA1CK101	C:FXD AL ELECT	100UF +-20% 16V
C 1111	1	ECEA1CK101	C:FXD AL ELECT	100UF +-20% 16V
C 1112	1	ECEA1CG221S	C:FXD AL ELECT	220UF +-20% 16V
C 1113	1	ECKD3F151KBN	C:FXD CER HI-K	150PF +-20% 3KV
C 1114	1	ECKD3F151KBN	C:FXD CER HI-K	150PF +-20% 3KV
C 1115	1	ECKD2H103PE	C:FXD CER HI-K	10000PF +100-0% 500V
C 1116	1	ECEA2CG100S	C:FXD AL ELECT	160V 10UF
C 1117	1	ECEA1HG100S	C:FXD AL ELECT	10UF +-20% 50V
C 1118	1	ECEA2CG100S	C:FXD AL ELECT	160V 10UF
C 1119	1	ECEA1HG100S	C:FXD AL ELECT	10UF +-20% 50V
C 1120	1	ECEA1HG100S	C:FXD AL ELECT	10UF +-20% 50V
C 1121	1	ECEA1HG100S	C:FXD AL ELECT	10UF +-20% 50V
C 1122	1	ECEA1CG471S	C:FXD AL ELECT	470UF +-20% 16V
C 1123	1	ECEA1CG471S	C:FXD AL ELECT	470UF +-20% 16V
C 1124	1	ECEA1HG100S	C:FXD AL ELECT	10UF +-20% 50V
C 1125	1	ECEA1HG100S	C:FXD AL ELECT	10UF +-20% 50V
C 1126	1	ECEA1CG471S	C:FXD AL ELECT	470UF +-20% 16V
C 1127	1	ECEA1CG471S	C:FXD AL ELECT	470UF +-20% 16V
C 1128	1	ECEA1HG100S	C:FXD AL ELECT	10UF +-20% 50V
C 1129	1	ECEA1HG100S	C:FXD AL ELECT	10UF +-20% 50V
C 1130	1	ECKF1H102KB	C:FXD CER HI-K	1000PF +-10% 50V
C 1131	1	ECEA1CG221S	C:FXD AL ELECT	220UF +-20% 16V
C 1132	1	ECEA1CG221S	C:FXD AL ELECT	220UF +-20% 16V
C 1133	1	ECKF1H102KB	C:FXD CER HI-K	1000PF +-10% 50V
C 1134	1	ECKF1H102KB	C:FXD CER HI-K	1000PF +-10% 50V
C 1135	1	ECKF1H181KB	C:FXD CER HI-K	180PF +-10% 50V
CR 1101	1	S1RBA60F	DIODE:PWR RECT	1A 600V
CR 1106	1	V06B	DIODE:PWR RECT	1.3A 600V
CR 1107	1	AC03FGM-CY	TRIAC	600V 3A
CR 1108	1	D1R150	DIODE:PWR RECT	200V 2A
CR 1109	1	CTU-24S	DIODE:SI	600V 3A
CR 1110	1	CTU-24S	DIODE:SI	600V 3A
CR 1111	1	MDC-5FA	R:FXD MET FLM	5 OHM 1% 1/2W
CR 1112	1	MDC-5FA	R:FXD MET FLM	5 OHM 1% 1/2W
CR 1113	1	MDC-5FA	R:FXD MET FLM	5 OHM 1% 1/2W
CR 1115	1	MA161TAP	DIODE:SI	100MA 50V

P5610A POWER ASSY DWG NO 4G205554

NO	QTY	PART NO	DESCRIPTION	
1116	1	MA150TA	DIODE:SI	100MA 35V
1117	1	MA150TA	DIODE:SI	100MA 35V
1118	1	MA150TA	DIODE:SI	100MA 35V
	1	2G401489-1	V.HV.POWER	
1105	1	4G470914	P5610A HEATSINK:IC	TC-80A
1101	1	IEC1.6AT	FUSE : TIME LAG	1.6A 250V 20MM
1101	1	ZUG2206-12A	NOISE FILTER	250V 5A
1104	1	57-10140R	CONNECTOR:PLUG	14PIN
1105	1	EMC-S1350Z	CONNECTOR	13P L=500MM
1101	1	4G431375	P5610A COIL	
1103	1	ELEH4R7KA	COIL:CHOKE	4.7UH 10%
1104	1	ELEH4R7KA	COIL:CHOKE	4.7UH 10%
1113	1	SN8D-500	SN COIL:CHOKE	2A
1114	1	SN8D-500	SN COIL:CHOKE	2A
1115	1	SN5-400	SN COIL	
421	1	3G614170-1DB	P5610A HEAT SINK:POWER	
422	1	4G616693-0B	P5220A CLAMP:TR-2	
423	1	4G617489-0PB	P5610A PLATE:NUT	
424	1	4G617489-0PB	P5610A PLATE:NUT	
425	1	4G617493-1GB	P5610A HOLDER:IC	
1106	1	EMCZ1305D61	CONNECTOR	
1000	1	ERD50TJ474	R:FXD CARBON	470K OHM 5% 1/2W
1101	1	ERD25TJ104V	R:FXD CARBON	100K OHM 5% 1/4W
1102	1	ERG2SJ104	R:FXD MET OXD	100K OHM 2% 2W
1103	1	ERD25TJ472V	R:FXD CARBON	4.7K OHM 5% 1/4W
1104	1	ERD25TJ104V	R:FXD CARBON	100K OHM 5% 1/4W
1105	1	ERD25TJ104V	R:FXD CARBON	100K OHM 5% 1/4W
1106	1	ERD25TJ104V	R:FXD CARBON	100K OHM 5% 1/4W
1107	1	ERD25TJ104V	R:FXD CARBON	100K OHM 5% 1/4W
1108	1	ERG3SJ100	R:FXD MET OXD	10 OHM +-5% 3W
1109	1	ERG3SJ472	R:FXD MET OXD	4.7K OHM +-5% 3W
1110	1	ERG2SJ104	R:FXD MET OXD	100K OHM 2% 2W
1111	1	ERD50TJ105	R:FXD CARBON	1M OHM 5% 1/2W
1112	1	TM64K2PV2-13	R:VAR CERMET	1K OHM 20%
1113	1	ERG2SJ220	R:FXD MET OXD	22 OHM 2% 2W
1114	1	ERD25TJ153V	R:FXD CARBON	15K OHM 5% 1/4W
1115	1	TM64K2PV2-53	R:VAR CERMET	5K OHM 20%
1116	1	ERD25TJ272V	R:FXD CARBON	2.7K OHM 5% 1/4W
1117	1	ERX3SJ1R0	R:FXD MET OXD	1 OHM +-5% 3W
1118	1	ERD25TJ470V	R:FXD CARBON	47 OHM 5% 1/4W
1119	1	ERG1SJ470	R FXD MET OXD	47 OHM +-5% 1W

P5610A POWER ASSY DWG NO 4G205554

REF NO	QTY	PART NO	DESCRIPTION	
R 1120	1	ERG1SJ220	R:FXD MET OXD	22 OHM +-5% 1W
R 1121	1	ERO25CKF7500	R:FXD MET FLM	750 OHM 1% 1/4W
R 1122	1	ERO25CKF1722	R:FXD MET FLM	17.2K OHM 1% 1/4W
R 1123	1	ERO25CKF2461	R:FXD MET FLM	2.46K OHM 1% 1/4W
R 1124	1	ERO25CKF4120	R:FXD MET FLM	412 OHM 1% 1/4W
R 1125	1	TM64K2PV2-32	R:VAR CERMET	0.3W
R 1126	1	ERO25CKF2211	R:FXD MET FLM	2.21K OHM 1% 1/4W
R 1127	1	ERO25CKF4120	R:FXD MET FLM	412 OHM 1% 1/4W
R 1128	1	ERO25CKF1002	R:FXD MET FLM	10K OHM 1% 1/4W
R 1129	1	ERO25CKF1002	R:FXD MET FLM	10K OHM 1% 1/4W
R 1130	1	ERD25TJ222V	R:FXD CARBON	2.2K OHM 5% 1/4W
R 1133	1	ERD25TJ221V	R:FXD CARBON	220 OHM 5% 1/4W
R 1135	1	ERD25TJ332V	R:FXD CARBON	3.3K OHM 5% 1/4W
R 1136	1	ERD25TJ104V	R:FXD CARBON	100K OHM 5% 1/4W
R 1137	1	ERD25TJ104V	R:FXD CARBON	100K OHM 5% 1/4W
R 1138	1	ERD25TJ105V	R:FXD CARBON	1M OHM 5% 1/4W
R 1139	1	ERD25TJ105V	R:FXD CARBON	1M OHM 5% 1/4W
RT 1105	1	PC505	DIP 6P	50MA 35V 150MV 5000VRMS
RT 1106	1	PC617	PHOTO COUPLER	CTR:50%
S 1101	1	ESB70702V	PUSHB SW	DPST 3A-250V AC
T 1101	1	85T07	P5610A TRANSFORMER	50VA 110-370V
U 1101	1	STK7406	POWER SUPPLY	60W 15V 2A
U 1102	1	TL081CP	IC:OP AMP	BI-FET
U 1103	1	LM317T	IC:V RGLTR	
U 1104	1	LM317T	IC:V RGLTR	
U 1105	1	LM337T	IC:V RGLTR	-1.2V TO -37V 1.5A
U 1106	1	TL081CP	IC:OP AMP	BI-FET
XF 1102	1	FEU031.1653	FUSE HOLDER	SEV,VDE,SEMKO,UL AND CSA
XF 1103	1	FEK031.1663	FUSE HOLDER CAP	5X20MM FUSE

P5610A CRT CONTROL DWG NO 4G205555

REF NO	QTY	PART NO	DESCRIPTION	
1201	1	LN48YP	LED	AMBER
1201	1	SLEM10S-2	CONNECTOR	10P AC 200V 1A 30M OHM
1202	1	PIC-FS2-T	CONNECTOR:PIN	2P
1204	1	001P1100	CONNECTOR:PIN	
1205	1	001P1100	CONNECTOR:PIN	
1206	1	001P1100	CONNECTOR:PIN	
1207	1	001P1100	CONNECTOR:PIN	
1211	1	EQ003-25009A	LAMP SOCKET	
1212	1	EQ003-25009A	LAMP SOCKET	
431	1	4G617488-0CB	P5610A HOLDER:VR	
432	1	4G617488-0CB	P5610A HOLDER:VR	
433	1	4G617488-0CB	P5610A HOLDER:VR	
1023	1	EVUKFA040B54	R VARIABLE CARBON	50K OHM +-20%
1024	1	EVUKGA038B24	R VARIABLE CARBON	20K OHM +-20%
1034	1	EVUKGA038B24	R VARIABLE CARBON	20K OHM +-20%
1201	1	BQ041-23303A	LAMP:INCD	6V 0.2A
1202	1	BQ041-23303A	LAMP:INCD	6V 0.2A

P5610A HV ASSY DWG NO 4G205556

REF NO	QTY	PART NO	DESCRIPTION	
C	1	ECEA1CU471	C:FXD AL ELECT	470UF +-20% 16V
C 1002	1	ECQM1H223KV	C:FXD FLM	50V 22000PF +-10%
C 1003	1	ECQM1H103KZ	C:FXD FLM	0.01UF 10% 50V
C 1004	1	ECQM1H473KV	C:FXD FLM	50V 47000PF +-10%
C 1005	1	CK45E3D472KY	C:FXD CER	2KV 4700PF +-20%
C 1006	1	CK45E3D472KY	C:FXD CER	2KV 4700PF +-20%
C 1007	1	CK45E3D472KY	C:FXD CER	2KV 4700PF +-20%
C 1008	1	CK45E3D472KY	C:FXD CER	2KV 4700PF +-20%
C 1009	1	CK45B3D151KY	C:FXD CER	5KV 150PF +-20%
C 1010	1	CK45E3D472KY	C:FXD CER	2KV 4700PF +-20%
C 1011	1	CK45E3D472KY	C:FXD CER	2KV 4700PF +-20%
C 1012	1	CK45B3D151KY	C:FXD CER	5KV 150PF +-20%
CR 1005	1	SHV06	DIODE	
CR 1010	1	1SS83TP	DIODE:SWITCHING	200MA 250V
CR 1014	1	1SS83TP	DIODE:SWITCHING	200MA 250V
CR 1015	1	1SS83TP	DIODE:SWITCHING	200MA 250V
CR 1016	1	1SS83TP	DIODE:SWITCHING	200MA 250V
J 1001	1	EMCS1050Z	CONNECTOR	10P L=200MM
J 1002	1	4G470923	11P FLAT CABLE	11P
Q 1010	1	2SC2258	TSTR:SI NPN	PC:1W FT:100MHZ
Q 1019	1	2SA1156	TSTR:SI PNP	1W 400V FT:200MHZ
Q 1020	1	2SA1156	TSTR:SI PNP	1W 400V FT:200MHZ
R 1002	1	ERD25TJ473V	R:FXD CARBON	47K OHM 5% 1/4W
R 1003	1	ERX1SJ2R2	R:FXD MET FLM	2.2 OHM 5% 1W
R 1004	1	ERD10TJ473	R:FXD CARBON	47K OHM 5% 1/8W
R 1008	1	ERD10TJ511	R:FXD CARBON	510 OHM 5% 1/8W
R 1009	1	ERD10TJ512	R:FXD CARBON	5.1K OHM 5% 1/8W
R 1010	1	ERD25TJ474V	R:FXD CARBON	470K OHM 5% 1/4W
R 1011	1	ERR-1SS101	R HV3	2KV +-2%
R 1012	1	ERD25TJ122V	R:FXD CARBON	1.2K OHM 5% 1/4W
R 1013	1	ERD25TJ103V	R:FXD CARBON	10K OHM 5% 1/4W
R 1014	1	ERC14GJ226	ó:FXD COMP	22M OHM +-5% 1/4W
R 1015	1	ERD25TJ103V	R:FXD CARBON	10K OHM 5% 1/4W
R 1016	1	ERR-2GS101	R HV2	2KV +-2%
R 1019	1	ERR-4GS101	R HV1	2KV +-5%
T 1002	1	85T02	HV TRANS	HVU-3C1021
U 1001	1	TL081CP	IC:OP AMP	BI-FET
U 1005	1	85C06	DIODE:PWR RECT	15KV +-5%(27UA)
V 1017	1	BF601-00066A	LAMP:NEON	
V 1018	1	BF601-00066A	LAMP:NEON	
XV 1017	1	4G614902-0XB	HOLDER:NEON	
XV 1018	1	4G614902-0XB	HOLDER:NEON	

P5610A CABLE ACCESSORY DWG NO 4G205557

REF NO	QTY	PART NO	DESCRIPTION	
	1	BQ041-23303A	LAMP:INCD	6V 0.2A
	1	CM2	CONNECTOR	POWER AC125V 15A
	2	ERL14P905110	R:FIX MET GRZ	9M OHM 110PF
	2	VQ-057Y21	10:1 - REF PROBE 1.5M	10:1 10M OHM
	2	1C026-11	C:FXD CER TC	11PF 5% 500V
	2	4G601210-0W	ADAPTER:BNC CONN	
1101	1	IEC1.6AT	FUSE : TIME LAG	1.6A 250V 20MM
M	1	MJP5610A-0	INSTRUCTION MANUAL	
P 441	1	4G634406-0W	P5610A LABEL:IDENT	
1101	1	1182-1276-2M	CABLE:PWR (DENTORI)	125V 7A

P5610A01 PACKAGE DWG NO 4G304249-1

REF NO	QTY	PART NO	DESCRIPTION
	1	2G710536-0E	KP-563 CUSHION,FRONT
	1	2G710537-0E	KP-563 CUSHION,REAR
	1	4G712781-0A	KP-563 CARTON BOX
P	1	563SE0P5610A	KP-563 PACKING KIT:EX

P5610A MECHA:MAIN FRAME DWG NO 4G304338

REF NO	QTY	PART NO	DESCRIPTION
	1	3G690509-1GB	P5610A ROD:EXTENSION,SW
	1	4G720634-0RB	P5610A BOSS:POWER KNOB
MP 1	1	A66A-85M63	P5610A FRAME,FRONT
MP 3	1	R76MP2632W	PUSH RIVET:P2632W
MP 5	1	1G590506-2WB	P5610A CHASSIS:MAIN
MP 6	1	3G614138-0FB	P5610A CHASSIS,MID
MP 7	1	3G614139-0FB	P5610A HOLDER:DELAY LINE
MP 8	1	3G650510-0L	P5610A SHIELD:PIPE
MP 9	1	3G700539-4G	P5610A INSULATION:PCB
MP 10	1	3G710402-0N	P9551A BAG PACKING
MP 11	1	3G710402-0N	P9551A BAG PACKING
MP 12	1	3G760041-0C	PUSHBUTTON,5X6 GREEN
MP 13	1	3G760568-0C	KNOB,10KN6UF
MP 14	1	3G760568-0C	KNOB,10KN6UF
MP 15	1	3G760568-0C	KNOB,10KN6UF
MP 16	1	3G760584-1W	P5610A GUIDE:SHAFT POWER
MP 17	1	3G760584-1W	P5610A GUIDE:SHAFT POWER
MP 18	1	4G540024-0B	P385B SPRING
MP 19	1	4G540609-1P	P5610A CUSHION:CRT
MP 20	1	4G540627-0A	P5610A SPRING:COIL
MP 21	1	4G617487-1DB	P5610A BRACKET:FAN
MP 22	1	4G617491-1XB	P5610A BAND:CRT
MP 23	1	4G617497-0BB	P5610A HOLDER:SHIELD PCB
MP 24	1	4G634506-0L	LABEL:CAUTION,HI-VOLTAGE
MP 25	1	4G644579-0WB	P5610A GUIDE PIN:UNIT
MP 26	1	4G644579-0WB	P5610A GUIDE PIN:UNIT
MP 27	1	4G644579-0WB	P5610A GUIDE PIN:UNIT
MP 28	1	4G644579-0WB	P5610A GUIDE PIN:UNIT
MP 29	1	4G644587-1BB	STUD:M3-5.3X0.5MM
MP 30	1	4G644587-1BB	STUD:M3-5.3X0.5MM
MP 31	1	4G644587-1BB	STUD:M3-5.3X0.5MM
MP 32	1	4G644587-1BB	STUD:M3-5.3X0.5MM
MP 33	1	4G644587-1BB	STUD:M3-5.3X0.5MM
MP 34	1	4G644593-2BB	STUD:M3-19X0.5MM
MP 35	1	4G644603-0BB	STUD:M3-20X0.5MM
MP 36	1	4G650503-1M	P5231A SHIELD:CRT
MP 37	1	4G712648-0N	Q056 BAG:PACKING,PLAIN
MP 38	1	4G712648-0N	Q056 BAG:PACKING,PLAIN
MP 39	1	4G712649-0N	BAG:ACCESSORY,PLAIN
MP 40	1	4G712649-0N	BAG:ACCESSORY,PLAIN
MP 41	1	4G760527-1X	P5231A RUBBER,HOLDER:CRT
MP 42	1	4G760527-1X	P5231A RUBBER,HOLDER:CRT
MP 43	1	4G760527-1X	P5231A RUBBER,HOLDER:CRT

P5610A MECHA:MAIN FRAME DWG NO 4G304338

NO	QTY	PART NO	DESCRIPTION
44	1	4G760640-1J	P5610A SUPPORT:PCB
45	1	4G780525-0N	P5231A GUARD:CRT
46	1	3G760583-1H	P5610A EXTENSION SHAFT
47	1	4G760651-0W	P5610A ADAPTER:PWR KNOB
48	1	4G702773-0G	P5610A INSULATION:CRT
49	1	4G617746-1BB	P5610A BRACKET,REAR:CPU
50	1	4G617747-0BB	P5610A HOLDER:CPU PCB
51	1	4G617747-0BB	P5610A HOLDER:CPU PCB
52	1	4G617748-1AB	P5610A PLATE,FRONT:CPU

P5610A MECHA:MAIN PANEL DWG NO 4G304339

REF NO	QTY	PART NO	DESCRIPTION
MP 101	1	3G614140-0AB	P5610A SUBPANEL,FRONT-RH
MP 102	1	3G631259-0AA	P5610A PANEL,FRONT-RH
MP 103	1	3G760563-0W	P5610A KNOB GUIDE
MP 104	1	3G760566-1C	KNOB,20KN6UF
MP 105	1	3G760567-0C	KNOB,12KN6UF
MP 106	1	3G760567-0C	KNOB,12KN6UF
MP 107	1	3G760568-0C	KNOB,10KN6UF
MP 108	1	3G760568-0C	KNOB,10KN6UF
MP 109	1	3G760569-1C	KNOB:LEVER SWITCH,A-18KB
MP 110	1	3G760569-1C	KNOB:LEVER SWITCH,A-18KB
MP 111	1	3G760569-1C	KNOB:LEVER SWITCH,A-18KB
MP 112	1	3G760569-1C	KNOB:LEVER SWITCH,A-18KB
MP 113	1	3G760570-1C	PUSHBUTTON:TACT SW,KHQ
MP 114	1	3G760570-1C	PUSHBUTTON:TACT SW,KHQ
MP 115	1	3G760570-1C	PUSHBUTTON:TACT SW,KHQ
MP 116	1	3G760570-1C	PUSHBUTTON:TACT SW,KHQ
MP 117	1	3G760570-1C	PUSHBUTTON:TACT SW,KHQ
MP 118	1	3G760570-1C	PUSHBUTTON:TACT SW,KHQ
MP 119	1	3G760570-1C	PUSHBUTTON:TACT SW,KHQ
MP 120	1	3G760570-1C	PUSHBUTTON:TACT SW,KHQ
MP 121	1	3G760570-1C	PUSHBUTTON:TACT SW,KHQ
MP 122	1	3G760570-1C	PUSHBUTTON:TACT SW,KHQ
MP 123	1	3G760570-1C	PUSHBUTTON:TACT SW,KHQ
MP 124	1	3G760570-1C	PUSHBUTTON:TACT SW,KHQ
MP 125	1	3G760570-1C	PUSHBUTTON:TACT SW,KHQ
MP 126	1	3G760570-1C	PUSHBUTTON:TACT SW,KHQ
MP 127	1	3G760570-1C	PUSHBUTTON:TACT SW,KHQ
MP 128	1	3G760570-1C	PUSHBUTTON:TACT SW,KHQ
MP 129	1	3G760570-1C	PUSHBUTTON:TACT SW,KHQ
MP 130	1	3G760570-1C	PUSHBUTTON:TACT SW,KHQ
MP 131	1	3G760570-1C	PUSHBUTTON:TACT SW,KHQ
MP 132	1	3G760570-1C	PUSHBUTTON:TACT SW,KHQ
MP 133	1	3G760570-1C	PUSHBUTTON:TACT SW,KHQ
MP 134	1	3G760570-1C	PUSHBUTTON:TACT SW,KHQ
MP 135	1	3G760570-1C	PUSHBUTTON:TACT SW,KHQ
MP 136	1	3G760570-1C	PUSHBUTTON:TACT SW,KHQ
MP 137	1	3G760570-1C	PUSHBUTTON:TACT SW,KHQ
MP 138	1	3G760570-1C	PUSHBUTTON:TACT SW,KHQ
MP 139	1	3G760570-1C	PUSHBUTTON:TACT SW,KHQ
MP 140	1	3G760570-1C	PUSHBUTTON:TACT SW,KHQ
MP 141	1	3G760570-1C	PUSHBUTTON:TACT SW,KHQ
MP 142	1	3G760570-1C	PUSHBUTTON:TACT SW,KHQ
MP 143	1	4G644576-1AB	SPACER:M2.5/M3-16.7
MP 144	1	4G644577-1AB	SPACER:M2.5/M3-12.3

P5610A MECHA:MAIN PANEL DWG NO 4G304339

NO	QTY	PART NO	DESCRIPTION
145	1	4G644577-1AB	SPACER:M2.5/M3-12.3
146	1	4G644577-1AB	SPACER:M2.5/M3-12.3
147	1	4G644577-1AB	SPACER:M2.5/M3-12.3
148	1	4G644577-1AB	SPACER:M2.5/M3-12.3
149	1	4G644577-1AB	SPACER:M2.5/M3-12.3
150	1	4G644578-1BB	STUD:M2.5-5.5X0.45MM
151	1	4G644578-1BB	STUD:M2.5-5.5X0.45MM
152	1	4G644578-1BB	STUD:M2.5-5.5X0.45MM
153	1	4G644578-1BB	STUD:M2.5-5.5X0.45MM

P5610A MECHA:SIDE PANEL DWG NO 4G304340

REF NO	QTY	PART NO	DESCRIPTION
	1	4G615880-0YB	P5230A TERMINAL:CALIB
	1	4G720519-0BB	TERMINAL-F:BODY
	1	4G720520-0JB	TERMINAL-F:NUT-1
	1	4G720521-0KB	TERMINAL-F:NUT-2
	6	4G720619-1FB	BOSS:M2.5-3.5X0.45MM
MP 201	1	3G614166-0F	P5610A SHIELD:SIDE PANEL
MP 202	1	3G631261-1AA	P5610A PANEL,SIDE
MP 203	1	3G760565-1W	P5610A CASE:SIDE PANEL
MP 204	1	3G760568-0C	KNOB,10KN6UF
MP 205	1	3G760568-0C	KNOB,10KN6UF
MP 206	1	3G760568-0C	KNOB,10KN6UF
MP 207	1	3G760568-0C	KNOB,10KN6UF
MP 208	1	3G760568-0C	KNOB,10KN6UF
MP 209	1	3G760568-0C	KNOB,10KN6UF
MP 210	1	3G760568-0C	KNOB,10KN6UF
MP 211	1	3G760568-0C	KNOB,10KN6UF
MP 212	1	4G617536-1AF	P5610A BLANK PLATE:CONN
MP 213	1	4G644152-3BB	STUD 3X5
MP 214	1	4G644152-3BB	STUD 3X5
MP 215	1	4G644589-3BB	STUD:M3/M2.5-19.5
MP 216	1	4G644589-3BB	STUD:M3/M2.5-19.5
MP 217	1	4G644589-3BB	STUD:M3/M2.5-19.5
MP 218	1	4G644589-3BB	STUD:M3/M2.5-19.5
MP 219	1	4G644589-3BB	STUD:M3/M2.5-19.5
MP 220	1	4G644590-1AB	SPACER:M3-26.5X0.5MM
MP 221	1	4G644590-1AB	SPACER:M3-26.5X0.5MM
MP 222	1	4G644590-1AB	SPACER:M3-26.5X0.5MM
MP 223	1	4G644590-1AB	SPACER:M3-26.5X0.5MM
MP 224	1	4G702079-0A	P5410A WASHER:BNC,INS
MP 225	1	4G760086-1H	P5410A SPACER:BNC,INS
MP 226	1	3G614148-2WB	P5610 CHASSIS:SIDE PANEL
MP 227	1	4G601087-0W	P5230A TERMINAL:CAL
MP 228	1	4G601516-0W	TERMINAL-F:GRD

P5610A MECHA:HV ASSY DWG NO 4G304341

REF NO	QTY	PART NO	DESCRIPTION
MP 251	1	2G760540-0W	P5610A CASE,INS:HI-TENS
MP 252	1	3G614149-1WB	P5610A CASE:HIGH TENS
MP 253	1	3G760576-0W	P5610A SUPPORT:HI-TENS
MP 254	1	4G634506-0L	LABEL:CAUTION,HI-VOLTAGE
MP 255	1	4G760640-1J	P5610A SUPPORT:PCB

P5610A MECHA:ESCUTCHEON DWG NO 4G304342

REF NO	QTY	PART NO	DESCRIPTION
261	1	2G760533-1A	P5610A ESCUTCHEON
262	1	4G530594-0J	P5610A FILTER:CRT
263	1	4G617595-0CB	P5610A REFLECTOR:LIGHT
264	1	4G634405-0AA	P5610A PANEL,FRONT:CRT

P5610A MECHA:ATTEN ASSY DWG NO 4G304343

REF NO	QTY	PART NO	DESCRIPTION
271	1	A66E-85M04	P5610A SUPPORT:ATTEN BNC
272	1	3G614165-1WB	P5610A COVER:ATTEN
273	1	4G617513-0EB	P5610A BRACKET:ATTEN PCB
274	1	4G617612-0CB	P5610A GRD-ATTEN
275	1	4G617724-0W	P5610A SHIELD:ATTEN BNC

P5610A MECHA:COVER ASSY DWG NO 4G304344

REF NO	QTY	PART NO	DESCRIPTION
	1	3G670610-0K	P5610A HANDLE
281	1	A78P-85M05	Q037B POUCH:ACCESSORY
282	1	R55K-84M82	HANDLE STOPPER SA-106
283	1	R55K-84M82	HANDLE STOPPER SA-106
284	1	2G580799-5HF	P5610A CABINET:SCOPE
285	1	4G617496-0NB	P5610A PLATE:AUX.STOPPER
286	1	4G617496-0NB	P5610A PLATE:AUX.STOPPER
287	1	4G760673-1G	P5610A FOOT
288	1	4G760673-1G	P5610A FOOT
289	1	3G550515-0J	P5610A HANDLE ASSY

P5610A MECHA:PWR UNIT-A DWG NO 4G304345

REF NO	QTY	PART NO	DESCRIPTION
	4	4G720612-1FB	BOSS:M3-4X0.5MM
MP 301	1	R76JKGLS3S	SUPPORT KGLS-3S:PCB
MP 302	1	R76K-B312250	BUSHING-B312-250
MP 303	1	R76K-B312250	BUSHING-B312-250
MP 304	1	R76K-B312250	BUSHING-B312-250
MP 305	1	R76K-B312250	BUSHING-B312-250
MP 306	1	R76K-SB500-6	BUSHING SB-500-6
MP 307	1	2G760534-0B	P5610A COVER,REAR
MP 308	1	3G614141-1BB	P5610A BRACKET:PWR UNIT
MP 309	1	3G614142-0FB	P5610A COVER:POWER UNIT
MP 310	1	3G631262-1AA	P5610 PANEL,REAR:AC UNIT
MP 311	1	3G760577-1W	P5610A GUARD:POWER UNIT
MP 312	1	4G616692-0BB	P5220A CLAMP:TR-1
MP 313	1	4G616694-0DB	P5220A CLAMP:TR-3
MP 314	1	4G617498-0AB	P5610A HOLDER:PWR SWITCH
MP 315	1	4G617514-1BB	P5610A BRACKET:CONN
MP 316	1	4G634195-0J	LABEL:PROTECTIVE EARTH
MP 317	1	4G634455-0W	P5610A LABEL:AC UNIT
MP 318	1	4G644148-2AB	SPACER 3X35
MP 319	1	4G644148-2AB	SPACER 3X35
MP 320	1	4G644586-1AB	SPACER:M3-31.5X0.5MM
MP 321	1	4G644586-1AB	SPACER:M3-31.5X0.5MM
MP 322	1	4G644587-1BB	STUD:M3-5.3X0.5MM
MP 323	1	4G644587-1BB	STUD:M3-5.3X0.5MM
MP 324	1	3G614143-0EB	P5610A CHASSIS:PWR UNIT

Q035J20 RECTANGULAR HOO DWG NO 4G304346

REF NO	QTY	PART NO	DESCRIPTION
MP 496	1	A78P-85M20	Q035J20 RECTANGULAR HOOD

Q039G20 COVER,FRONT DWG NO 4G304347

REF NO	QTY	PART NO	DESCRIPTION
MP 491	1	2G760535-1B	Q039G20 COVER,FRONT

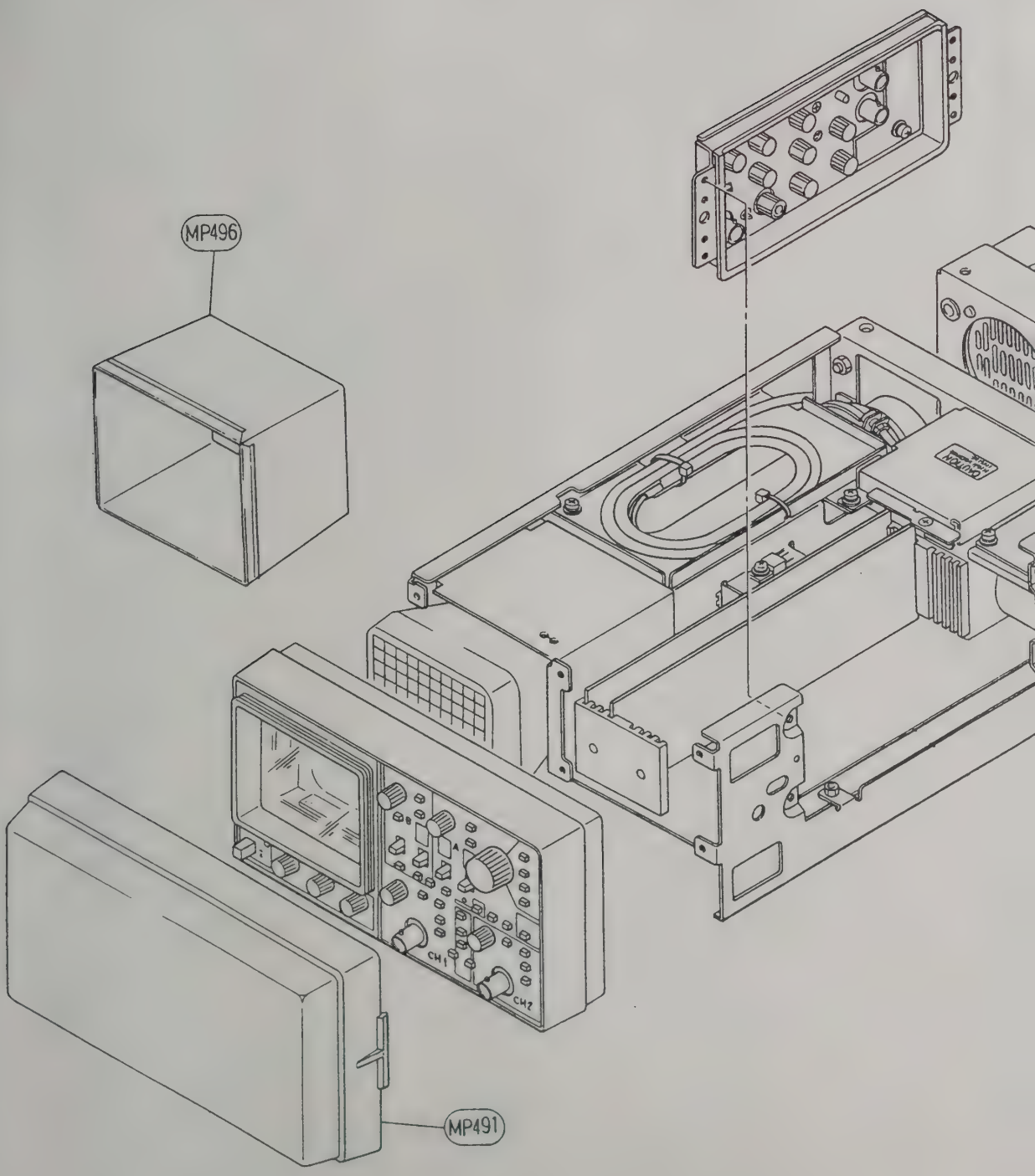
MP496
CH1
CH2
MP491

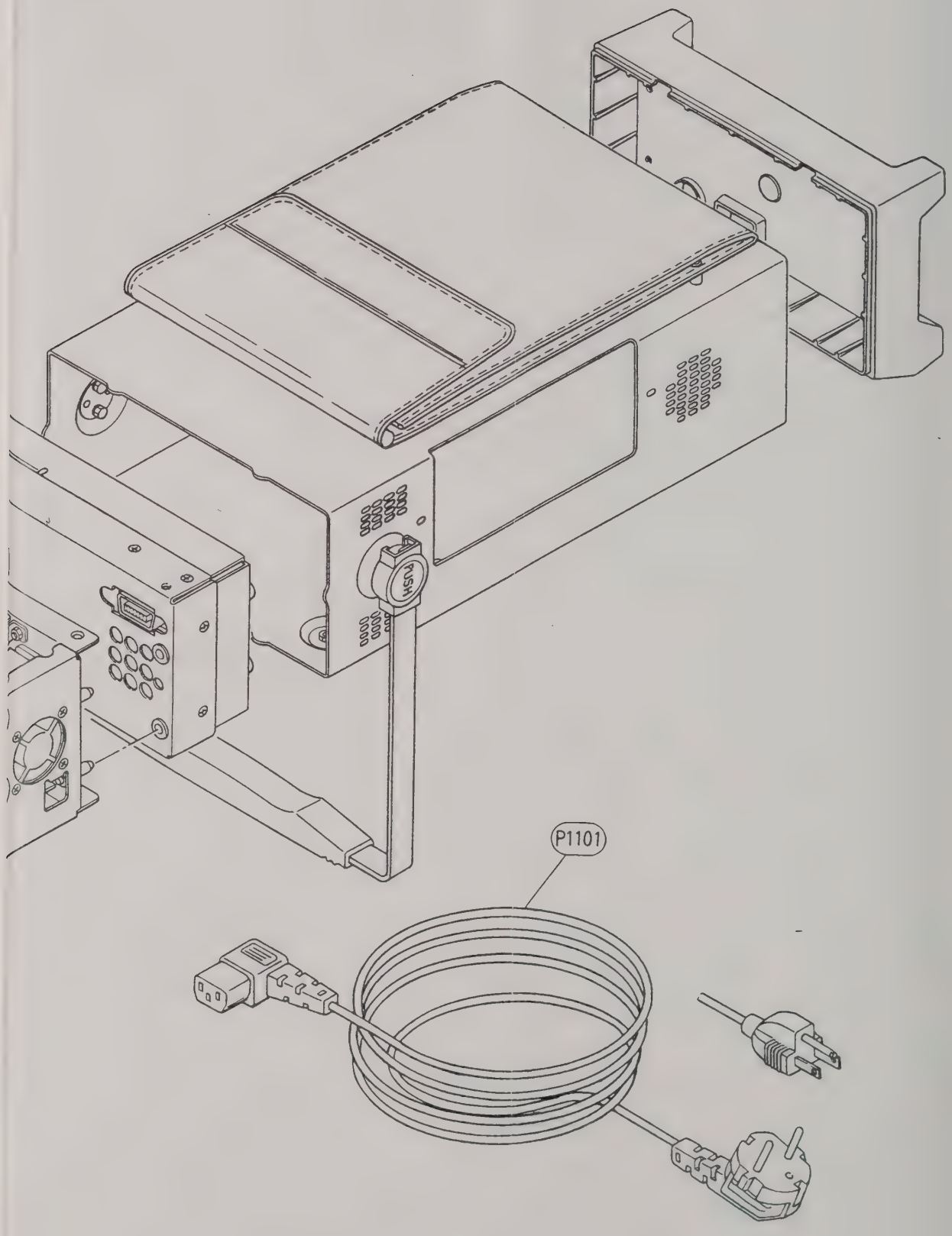
PUSH
P1101

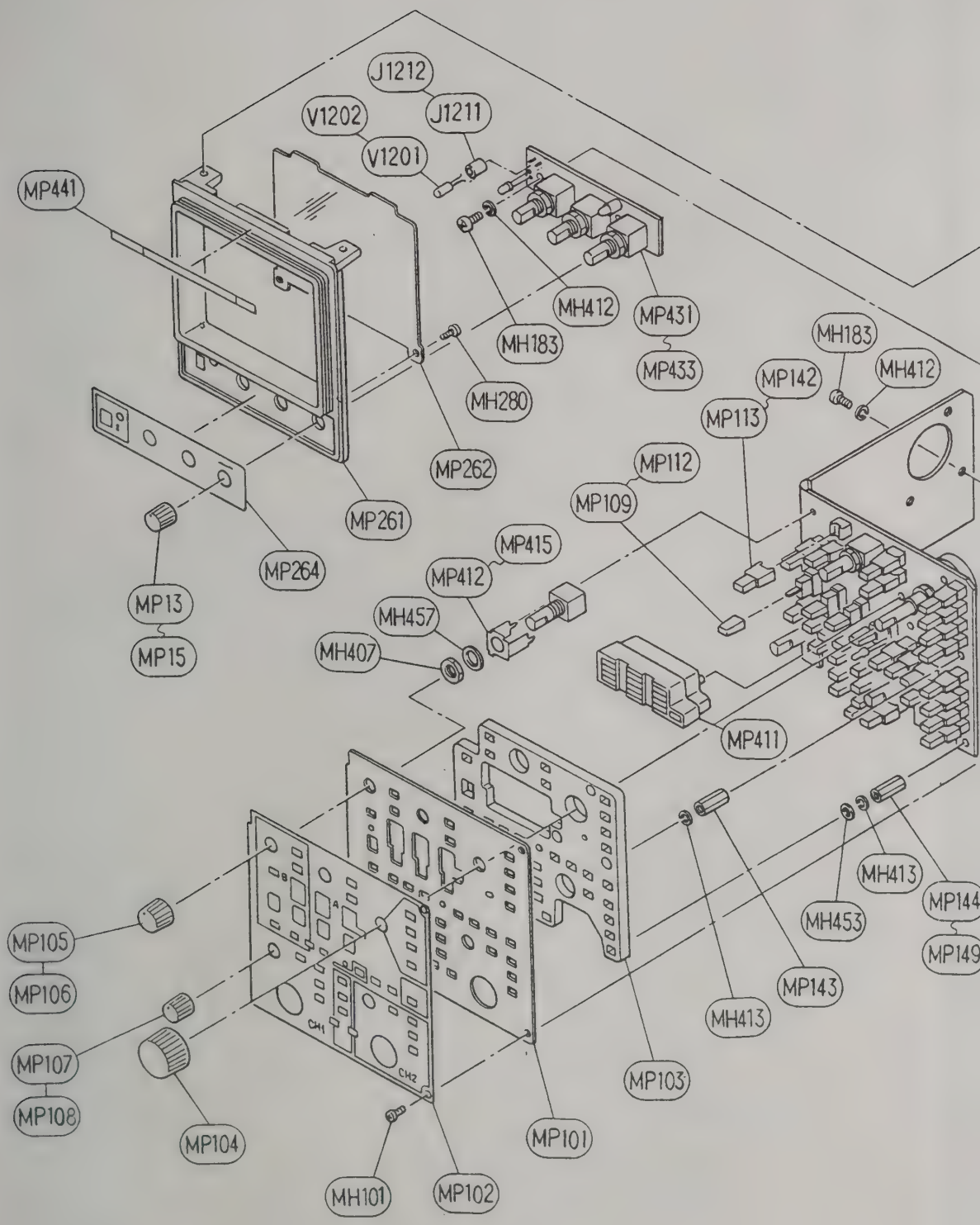
J1212
J1211
V1202
V1201
MP441
MH412
MP431
MH183
MP433
MH280
MH183
MP142
MH412
MP113
MP262
MP112
MP109
MP261
MP415
MP264
MP412
MP13
MH457
MP15
MH407
MP411
MP144
MH413
MH453
MP149
MP143
MP105
MH413
MP106
MP103
MP107
MP108
MP104
MP101
MH101
MP102

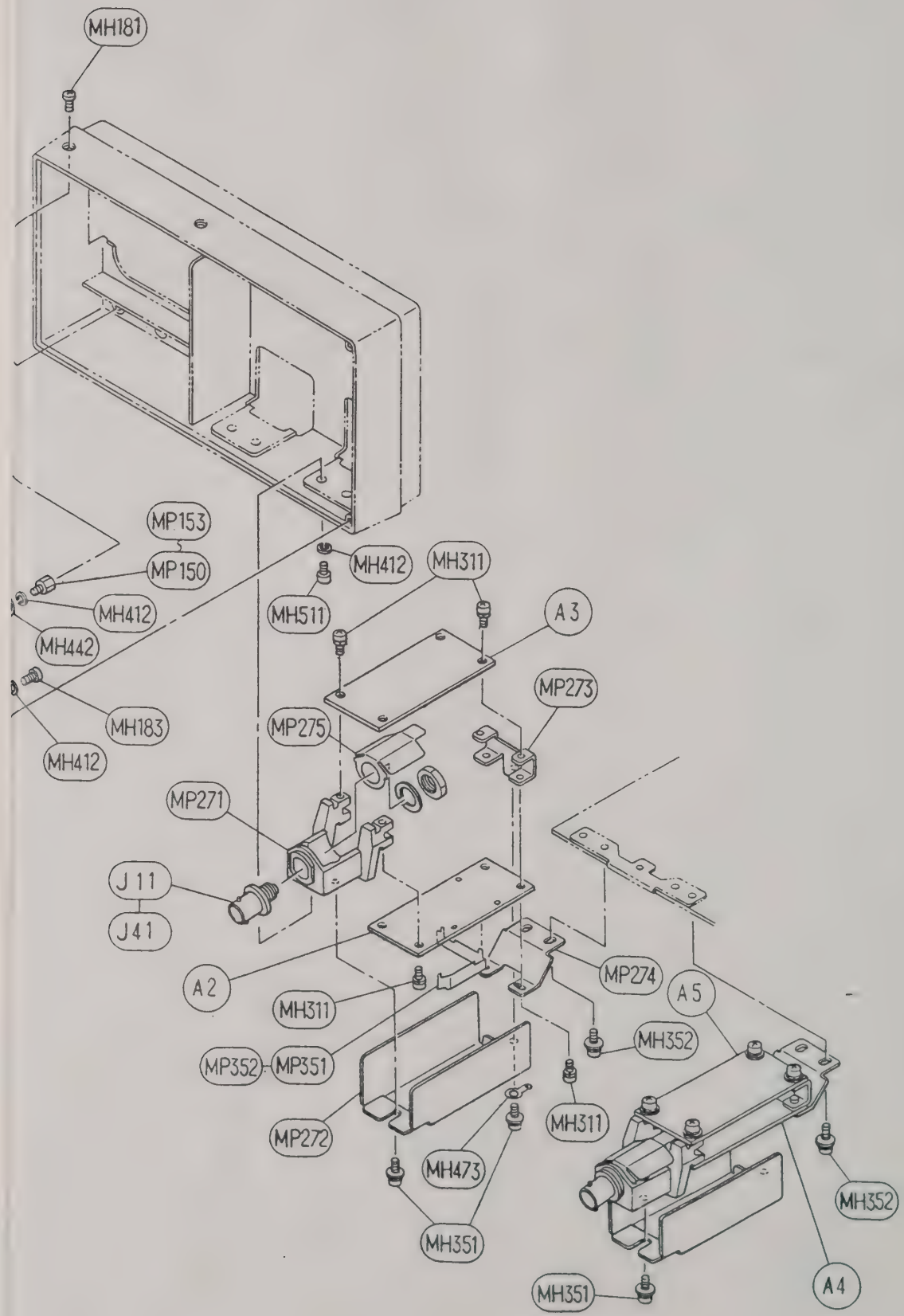
MH181
MP153
MP150
MH412
MH442
MH412
MH183
MH412
MH412
MH511
MH311
A3
MP273
MP275
MP271
J11
J41
A2
MH311
MP352
MP351
MP272
MH473
MH351
MP274
A5
MH352
MH311
MH351
MH352
A4

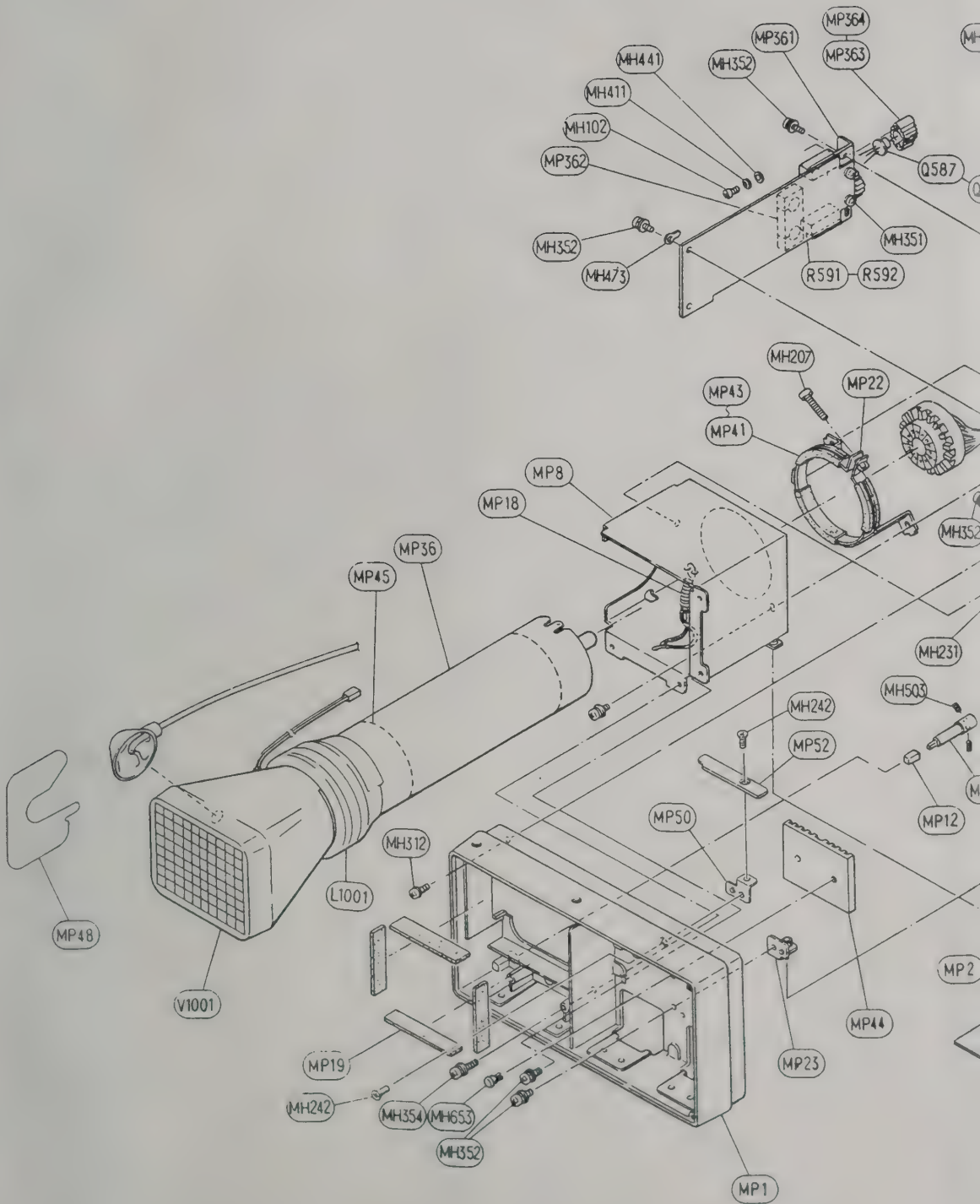
MP364
MP361
MP363
MH441
MH352
MH411
MH102
MP362
Q587
MH352
MH351
MH473
R591
R592
MH207
MP43
MP22
MP41
MP8
MP18
MP36
MP45
MH352
MH231
MH503
MH242
MP52
MP12
MP50
MH312
L1001
MP48
V1001
MP2
MP44
MP23
MP19
MH242
MH354
MH653
MH352
MP1

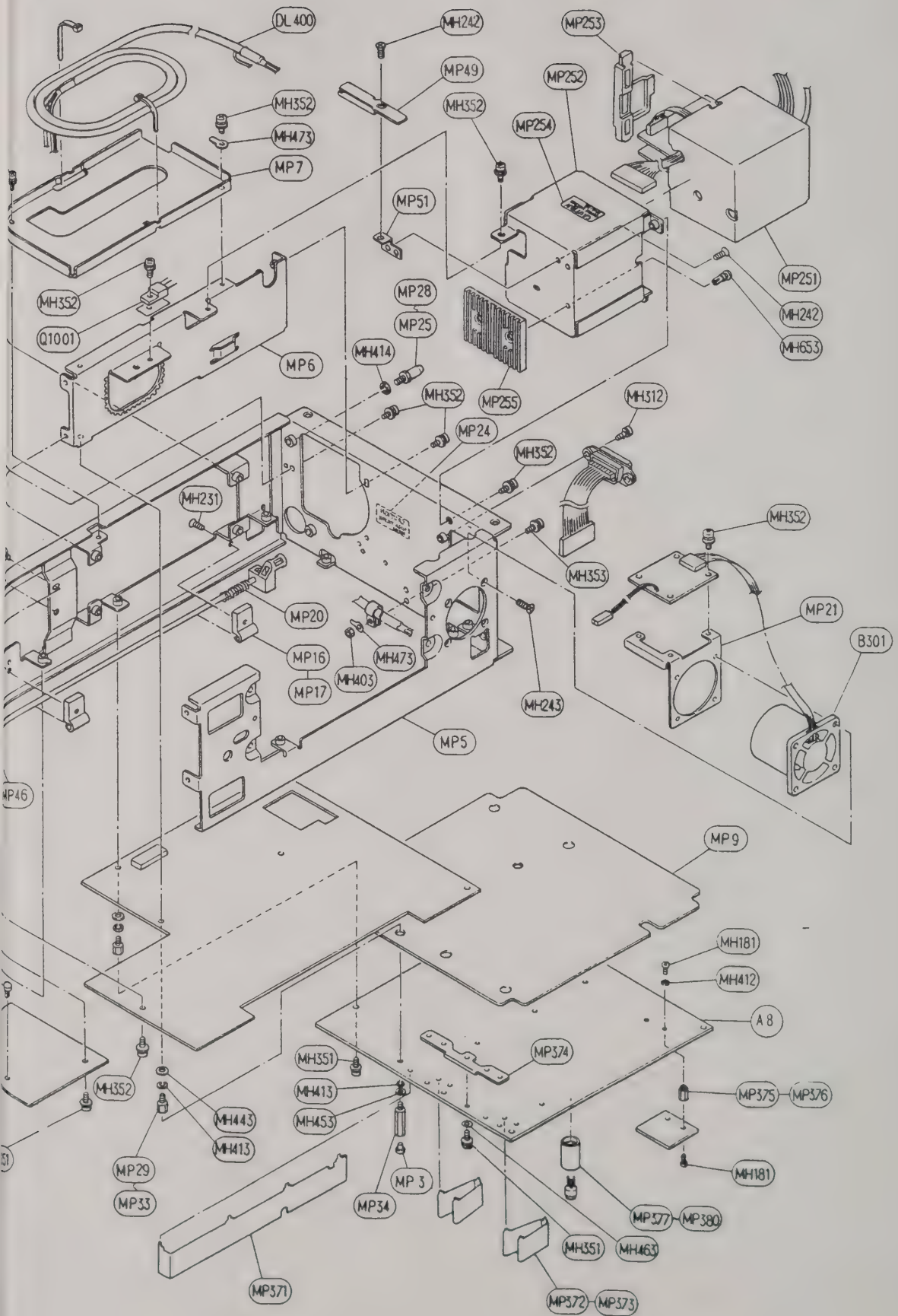
DL400
MH242
MP253
MP49
MP252
MH352
MH352
MP254
MH473
MP7
MP51
MP251
MH352
MP28
MH242
Q1001
MP25
MP6
MH653
MH414
MH352
MP255
MH512
MP24
MH352
MH231
MH352
MH353
MP21
MP20
B301
MP16
MH473
MH403
MP17
MH243
MP5
MP46
MP9
MH181
MH412
A8
MH351
MP374
MH352
MH413
MP375
MP376
MH443
MH453
MH413
MH181
MP29
MP33
MP3
MP34
MP377
MP380
MH351
MH463
MP371
MP372
MP373

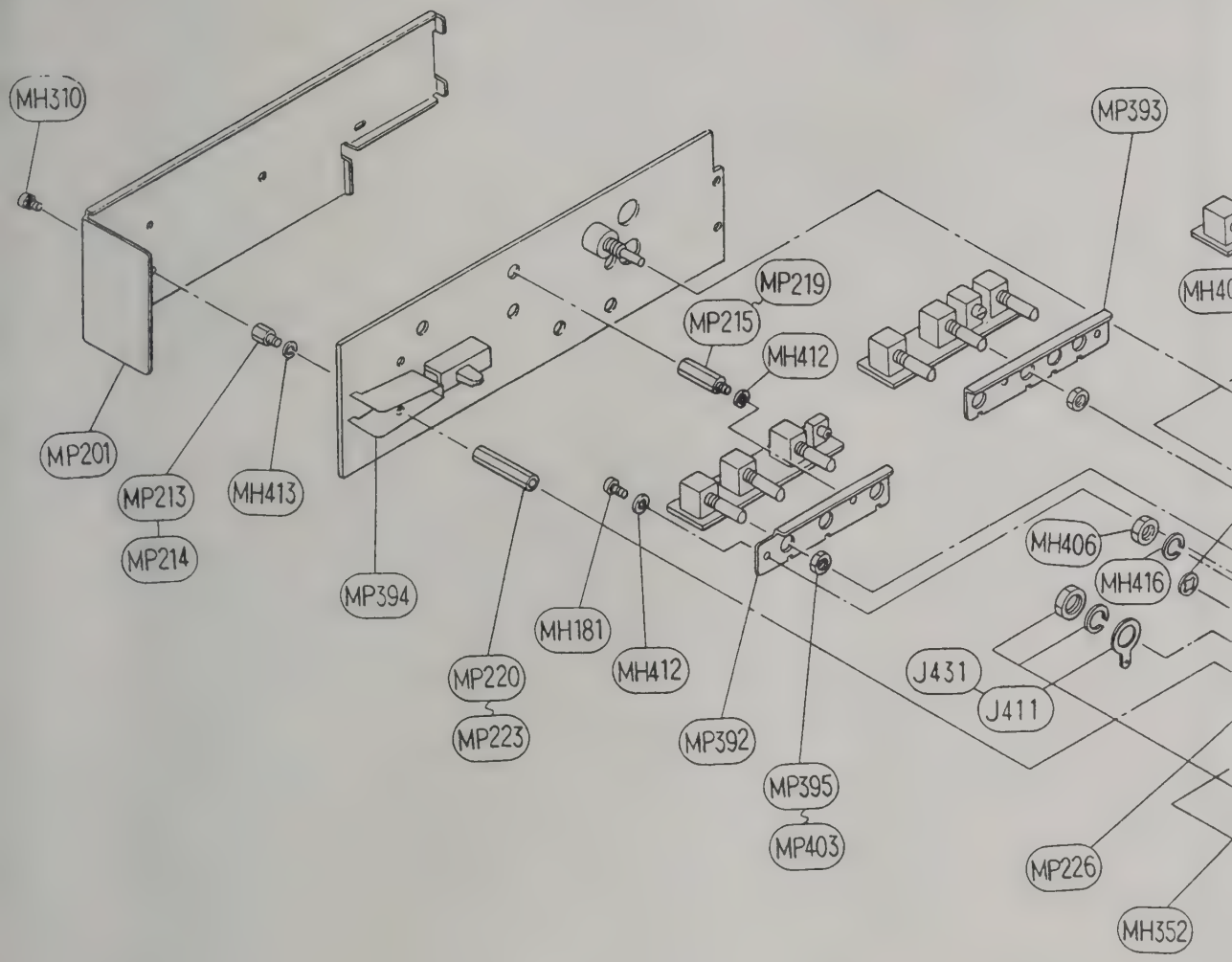
MH310
MP201
MP213
MP214
MH413
MP394
MP220
MP223
MH181
MH412
MP219
MP215
MH412
MP392
MP395
MP403
MP393
MH406
MH416
J431
J411
MP226
MH352

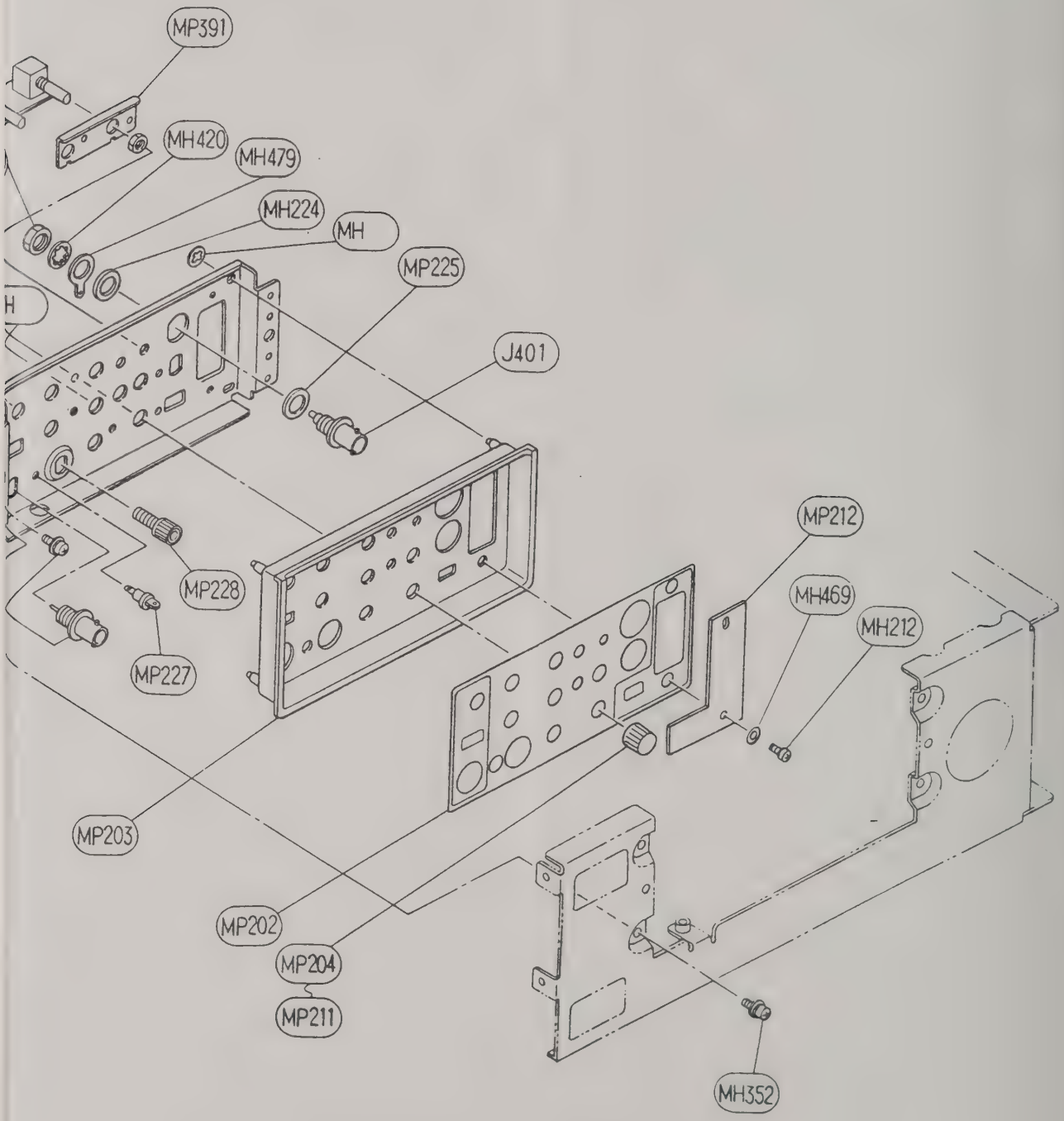
MP391
MH420
MH479
MH224
MH
MP225
J401
MP228
MP227
MP212
MH469
MH212
MP203
MP202
MP204
MP211
MH352

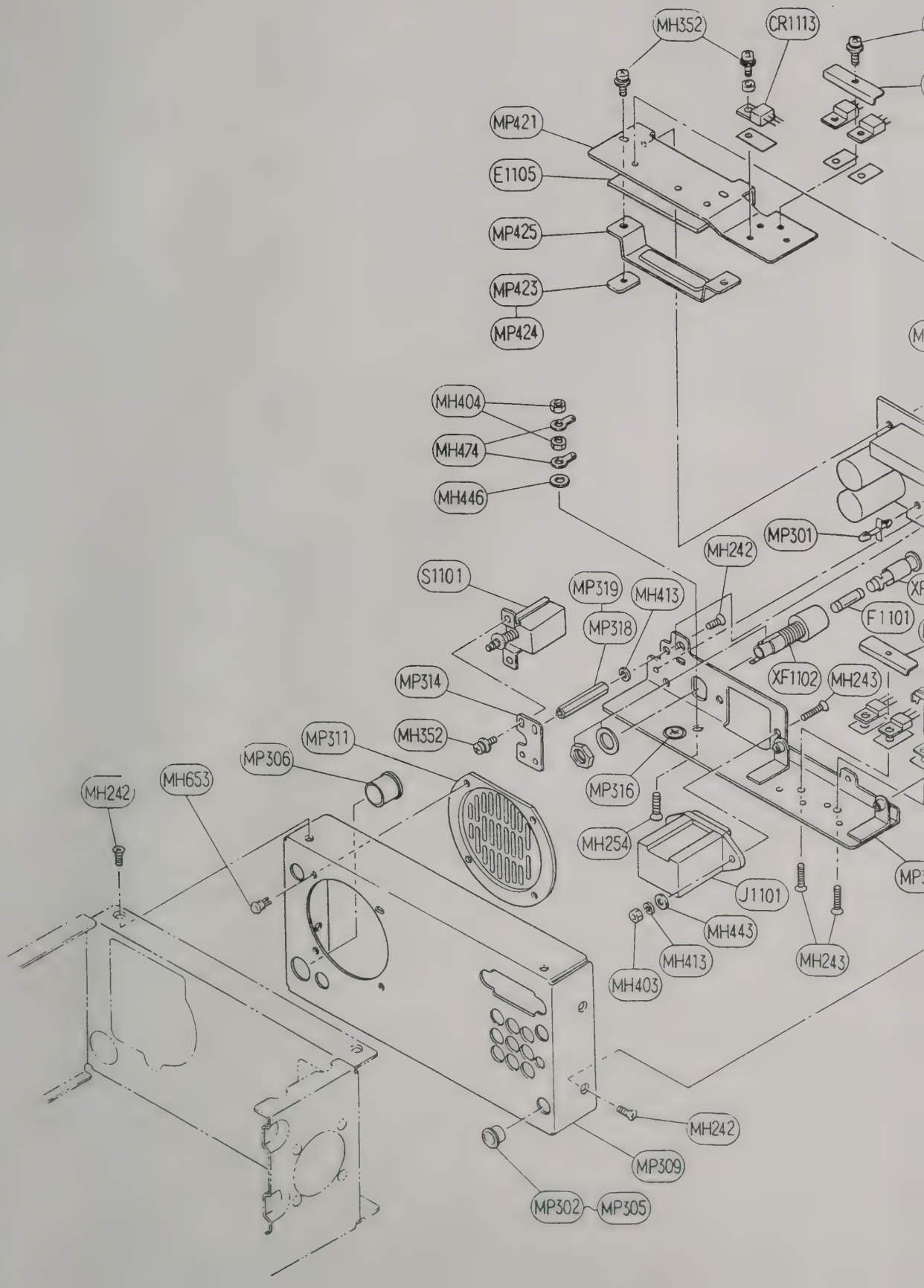
MH352
CR1113
MP421
E1105
MP425
MP423
MP424
MH404
MH474
MH446
MP301
MH242
S1101
MP319
MH413
MP318
F1101
MP314
XF1102
MH243
MH352
MP311
MP306
MP316
MH242
MH653
MH254
J1101
MH443
MH413
MH403
MH243
MH242
MP309
MP302
MP305

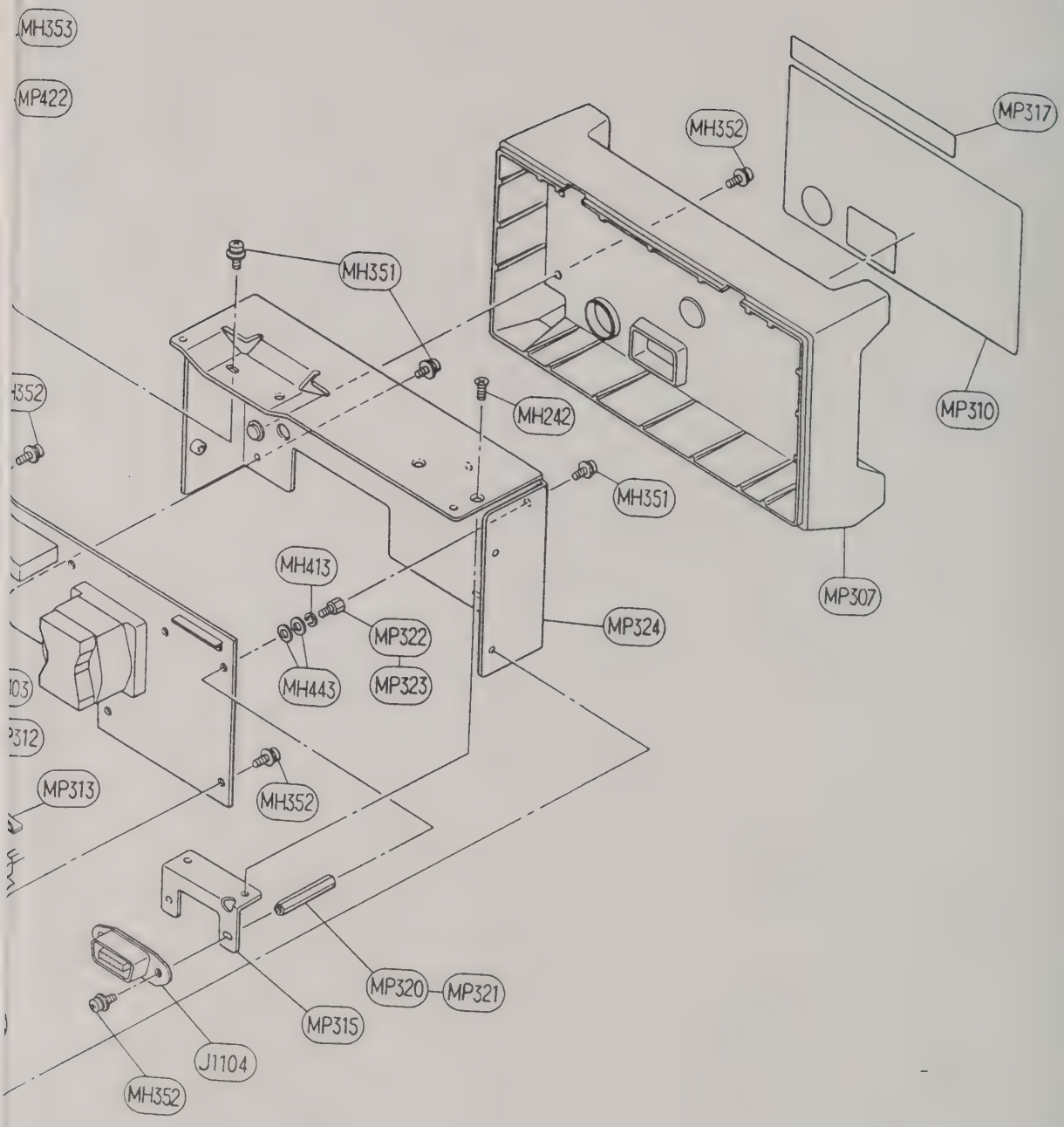
MH353
MP422
MH352
MP317
MH351
MH242
MP310
MH351
MH413
MP322
MP324
MH443
MP323
MP307
MP313
MH352
MP320
MP321
MP315
J1104
MH352

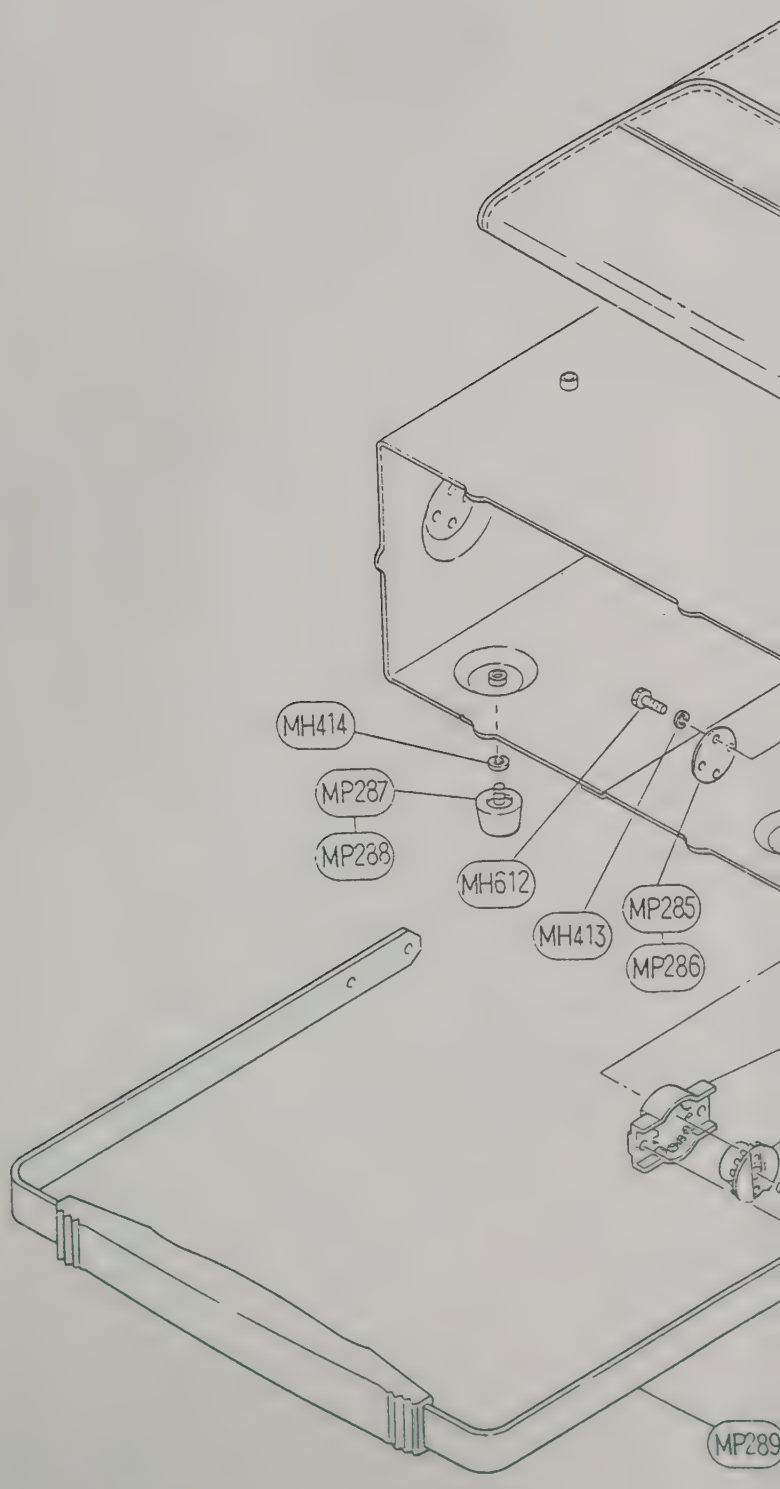
MH414
MP287
MP288
MH612
MH413
MP285
MP286
MP289

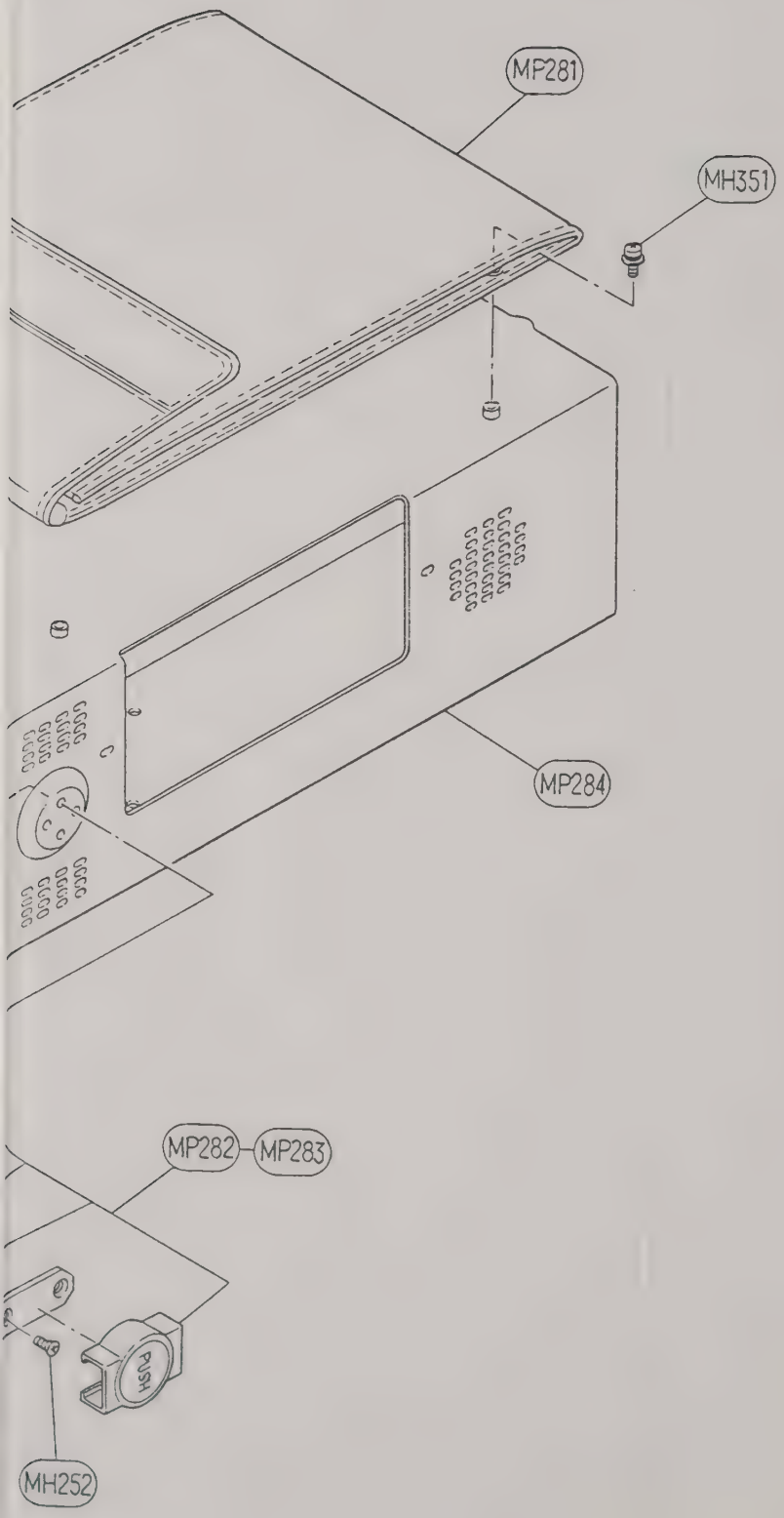
MP281
MH351
MP284
MP282
MP283
PUSH
MH252

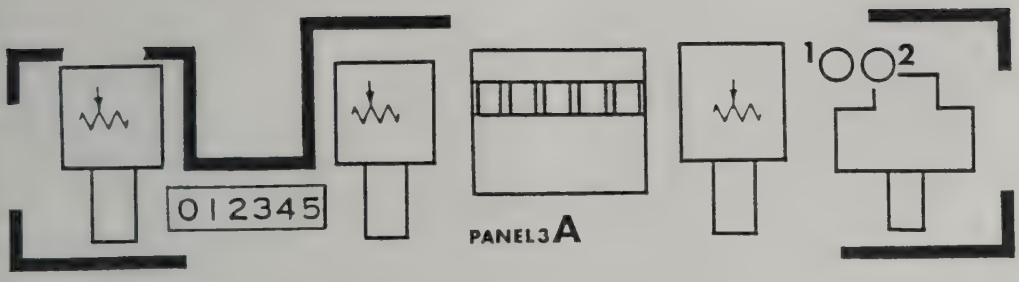

PANEL-3A 2G-40-1490-A

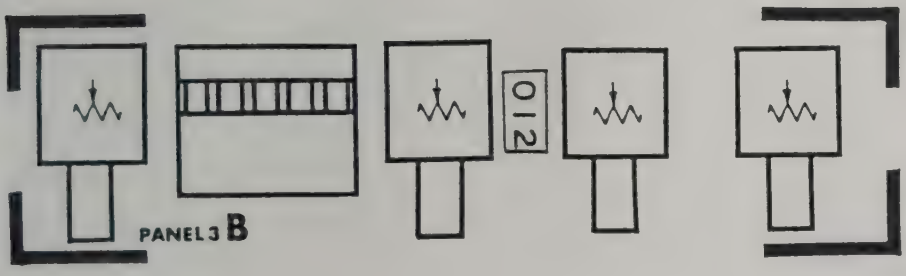

PANEL-3B 2G-40-1490-B

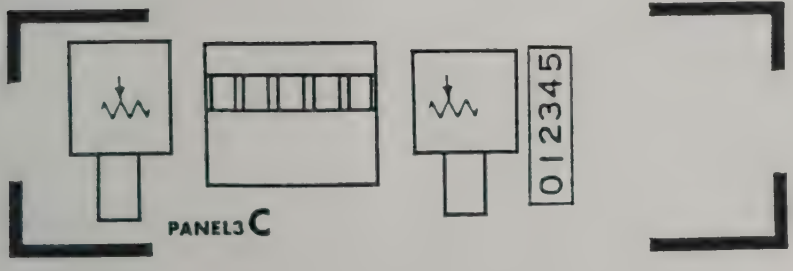

PANEL-3C 2G-40-1490-C

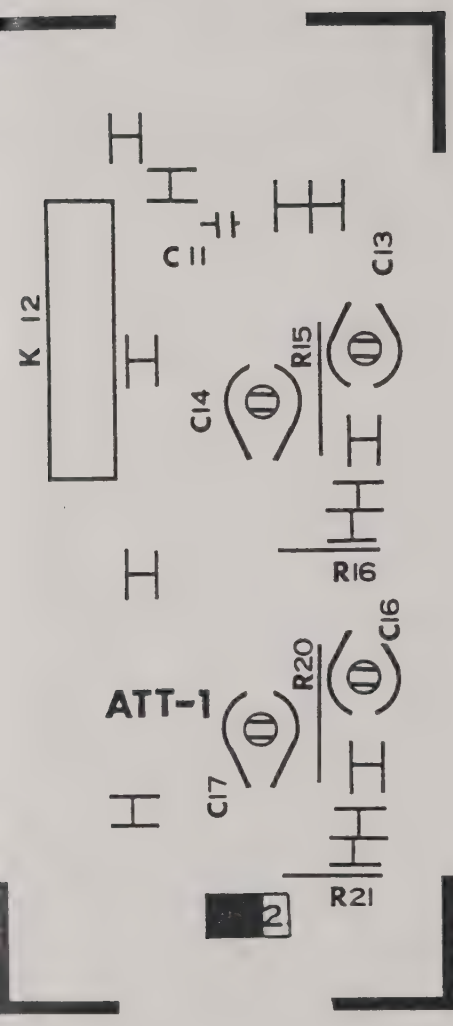

ATT1 4G-40-12942

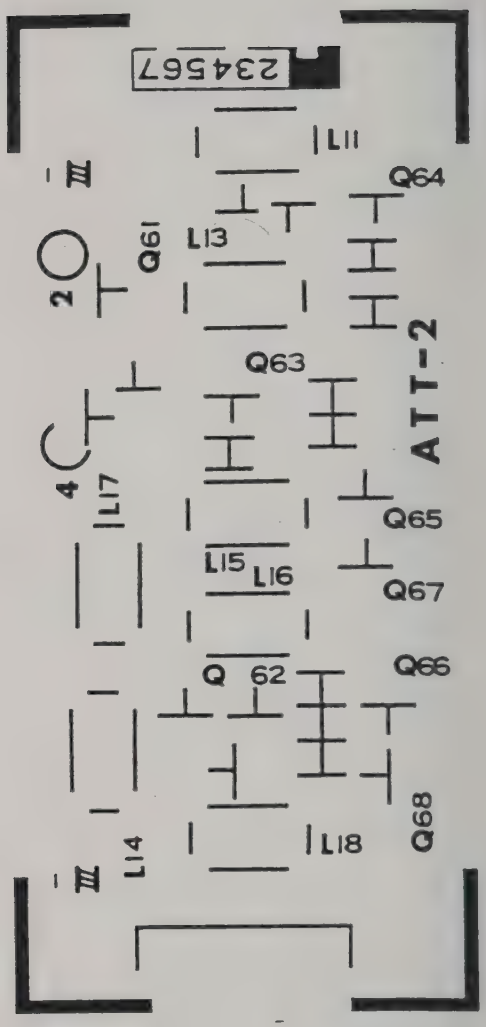

ATT2 4G-40-12932

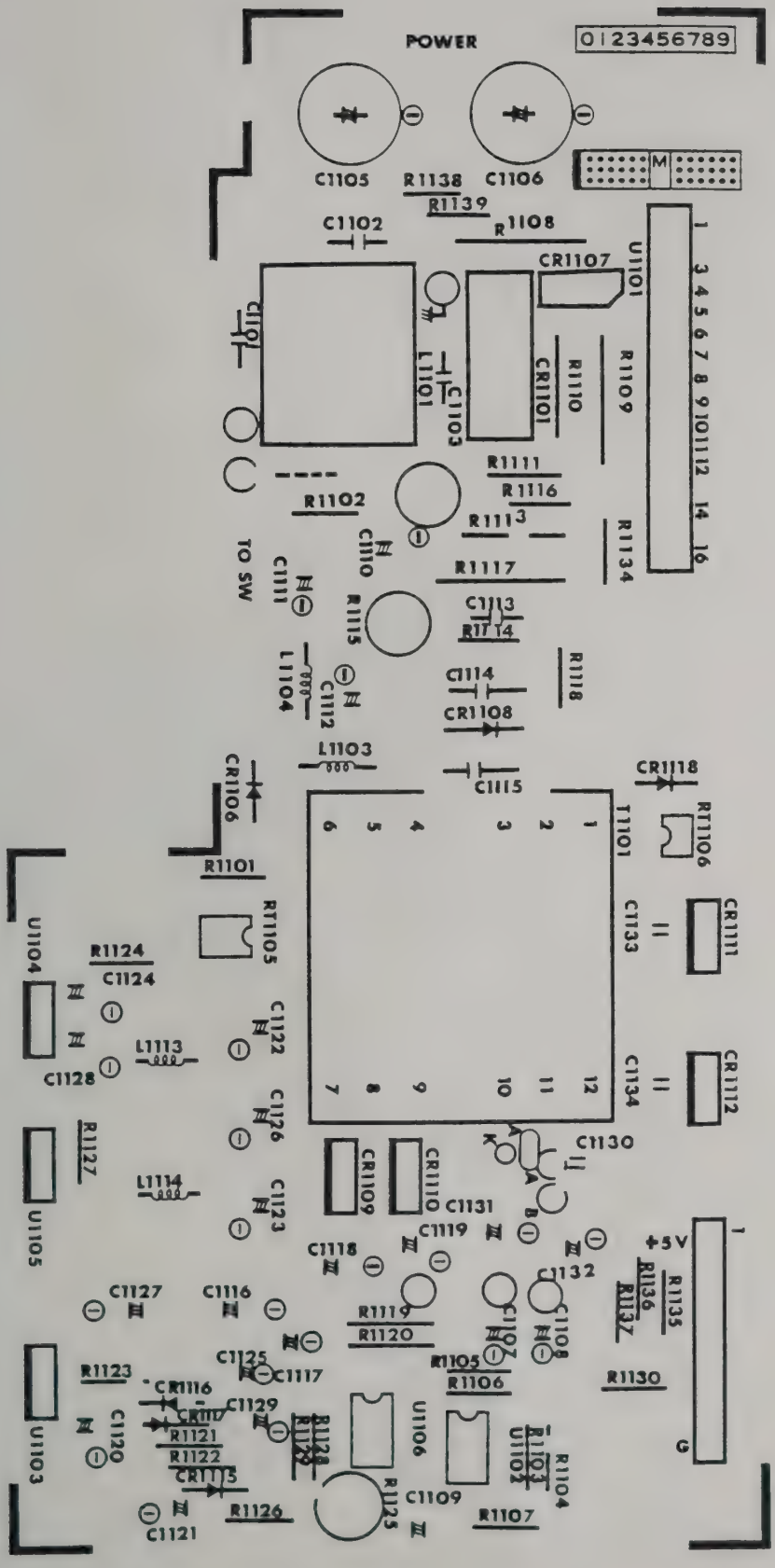

POWER 2G-40-1489-D

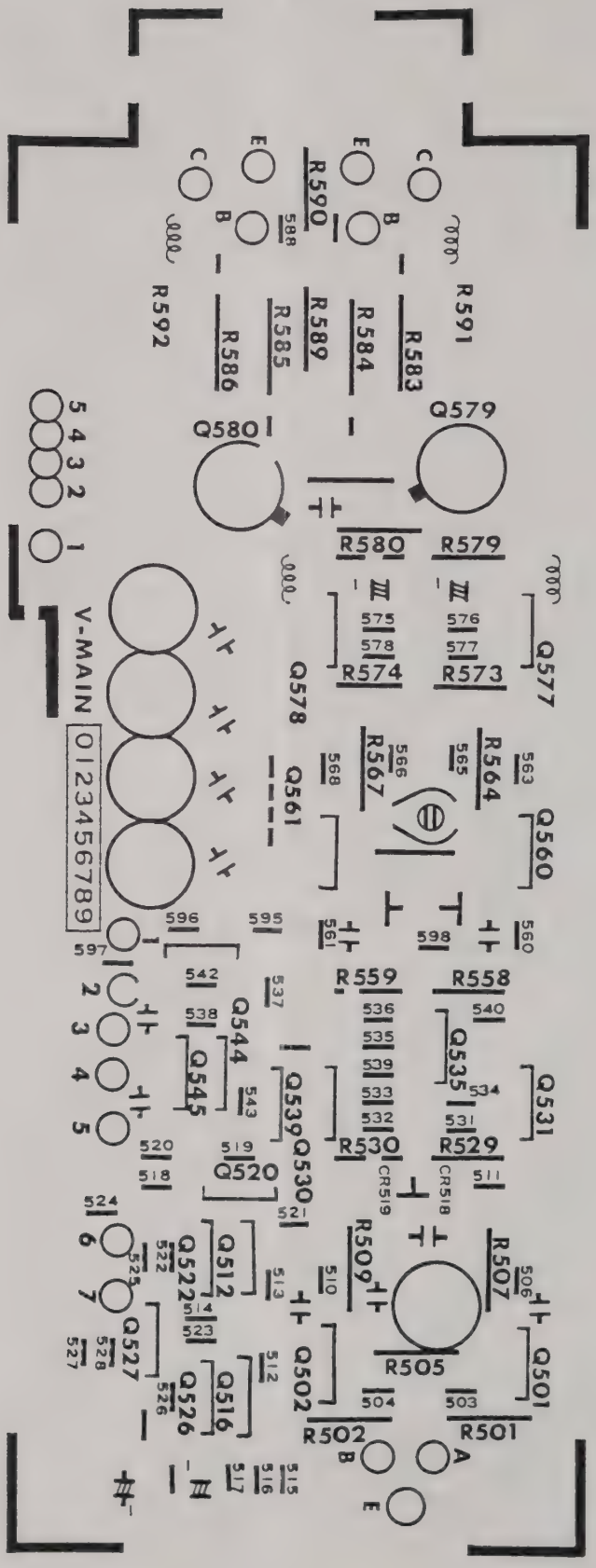

V MAIN 2G-40-1489-A

PARTS PLACEMENT

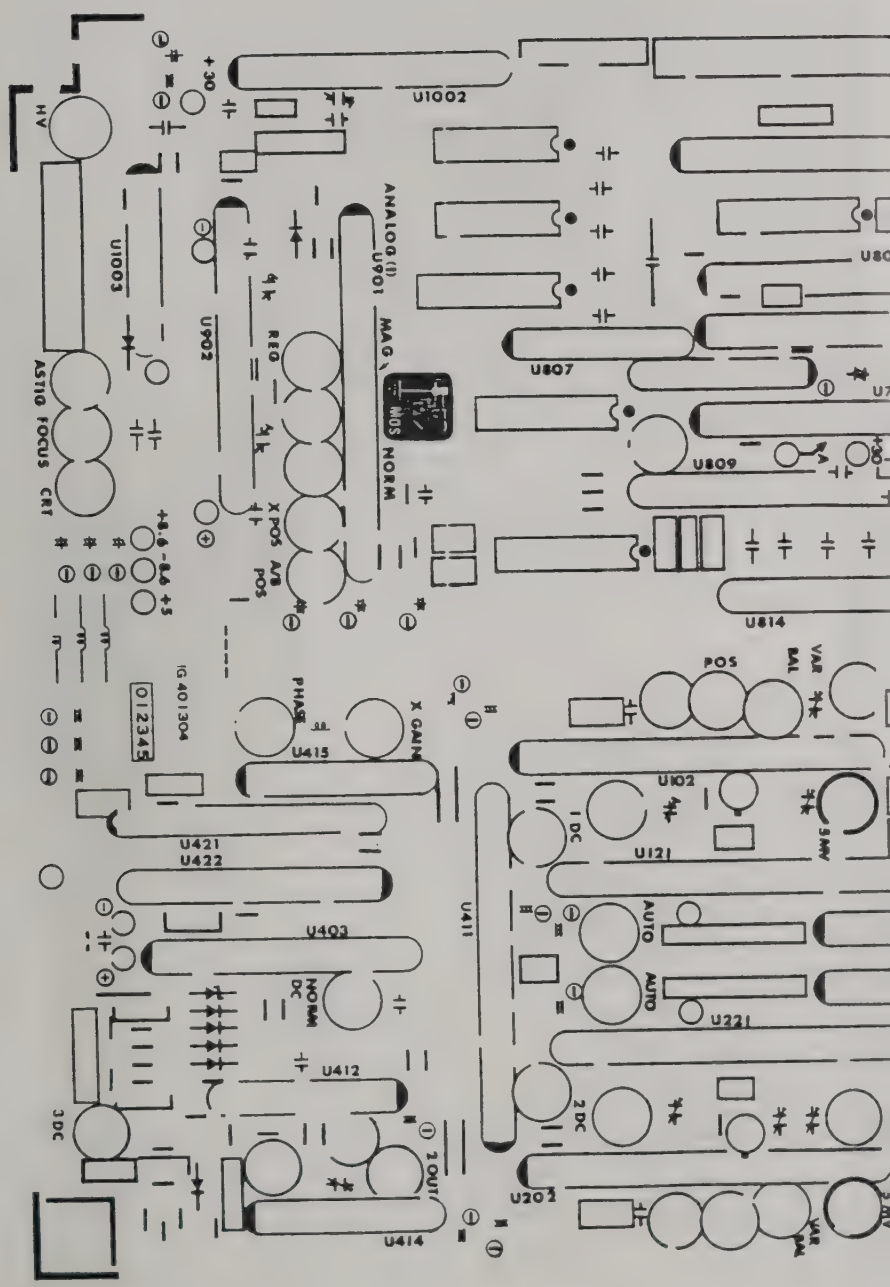
U1002
U1003
U902
U901
ANALOG (1)
MAG
NORM
REG
X POS
A/B POS
ASTIG FOCUS CRT
HV
+30
U807
U809
U814
POS
VAR BAL
PHASE
X GAIN
U415
U421
U422
U403
U412
U414
U411
U102
U121
1 DC
5 MV
AUTO
U221
2 DC
U202
2 OUT
3 DC
NORM DC
IG 401304
012345

ANALOG-1

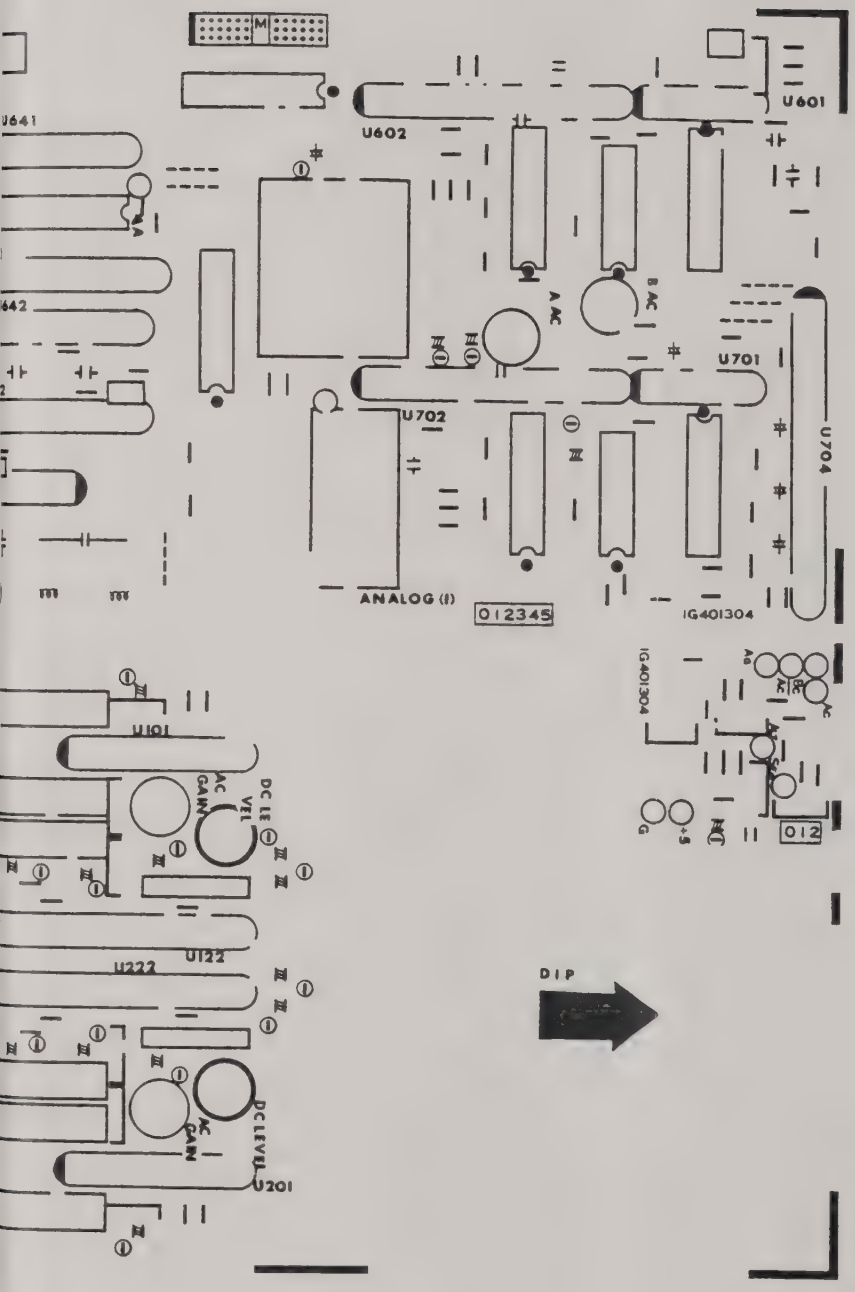
U641
U642
U602
U601
U701
U702
U704
ANALOG (I)
012345
IG401304
012
U101
U122
U222
U201
DC LEVEL
AC GAIN
DIP

G-40-1336

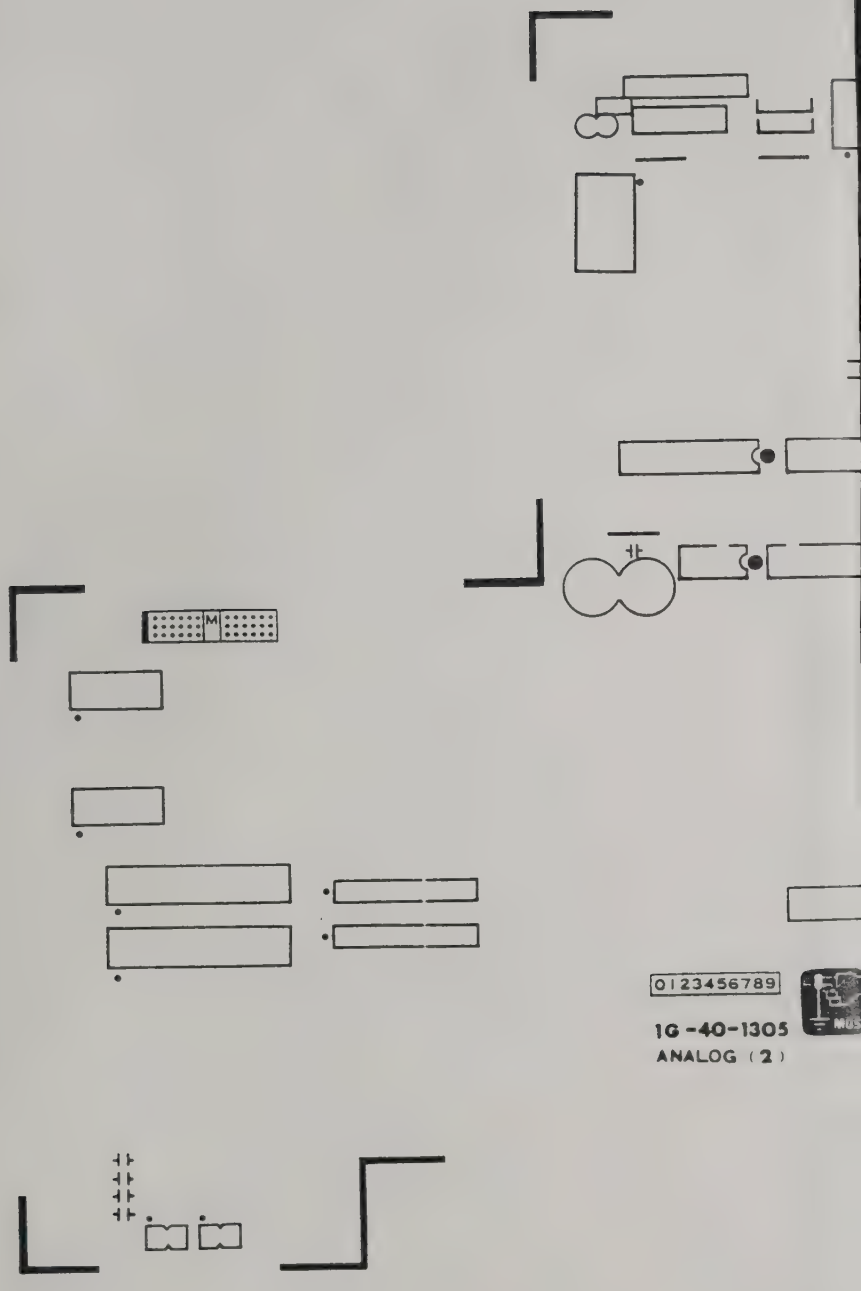
M
0123456789
1G-40-1305
ANALOG (2)

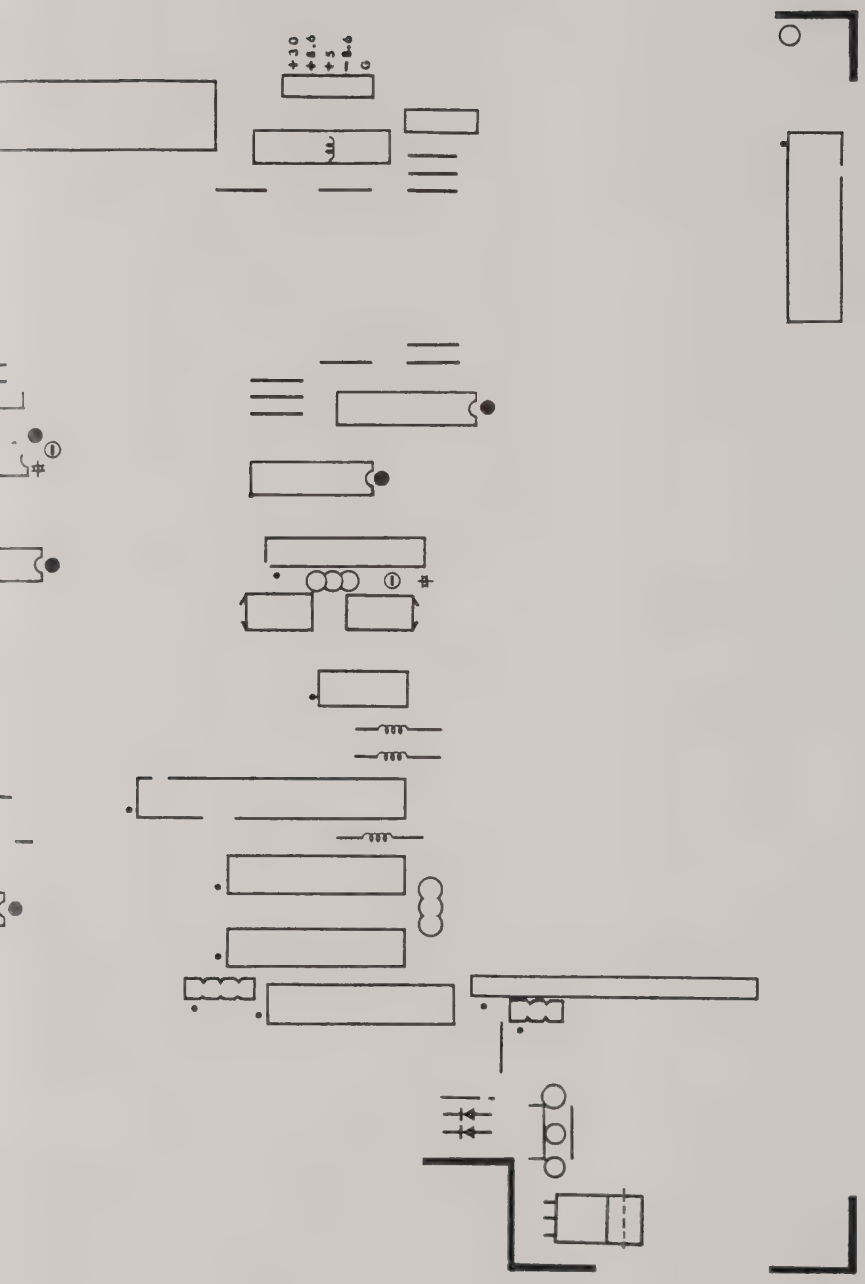

80-1305

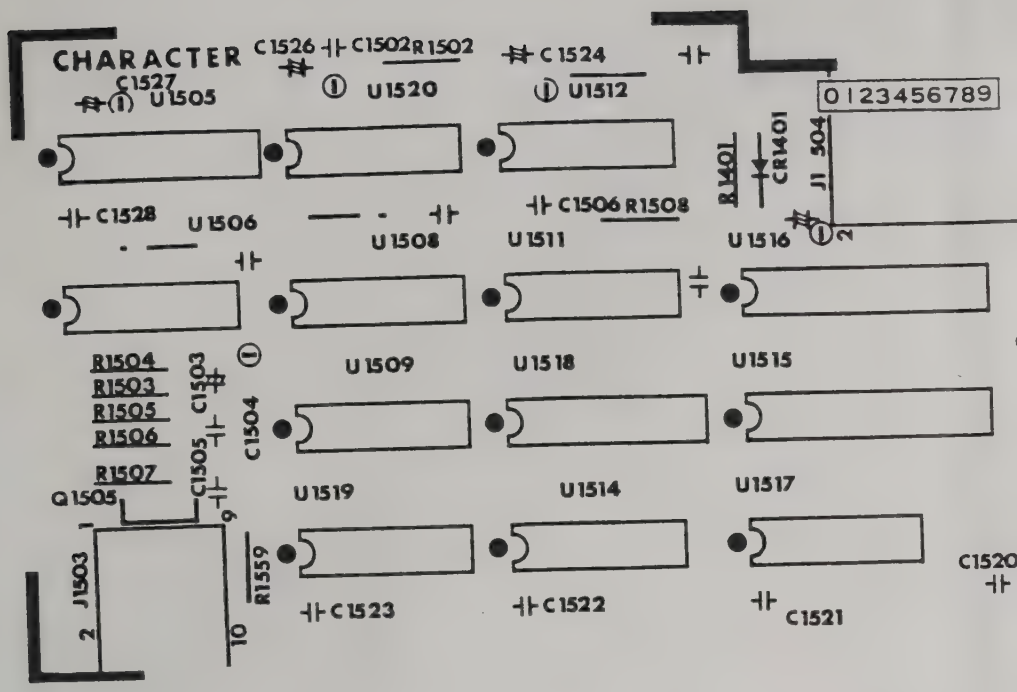

CHARACTER 20

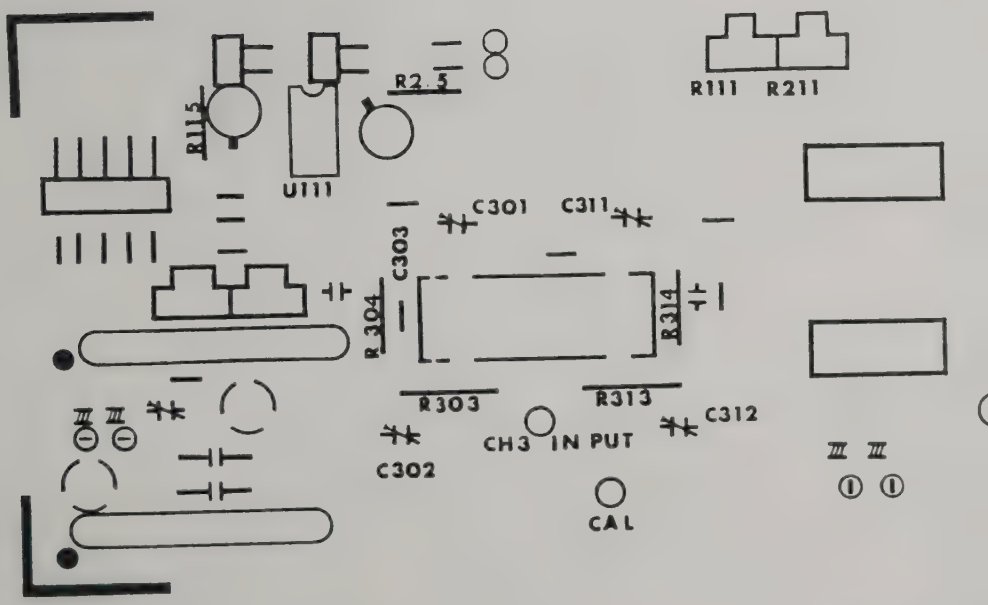

PANEL-3 20

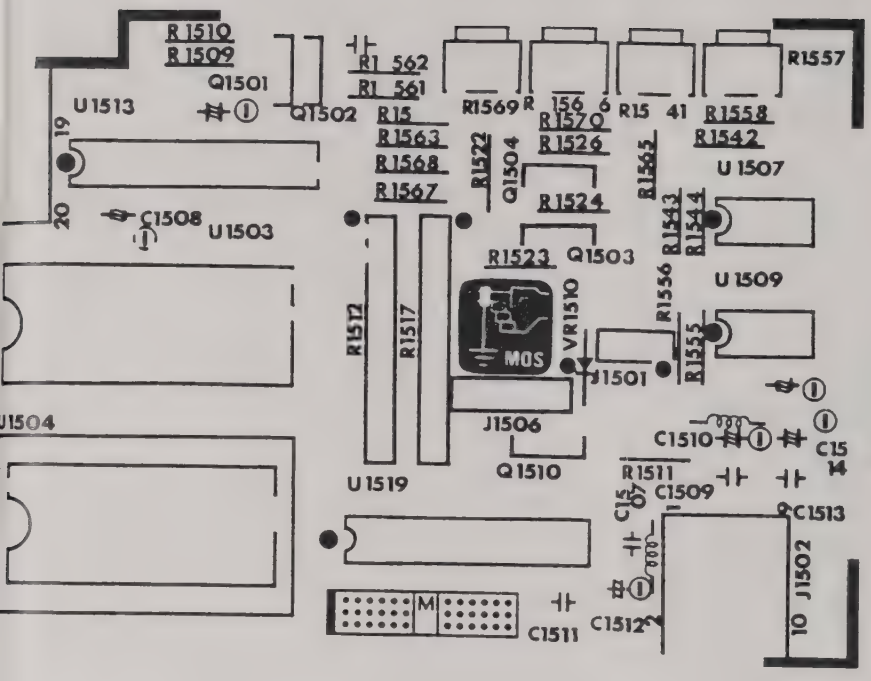

0-1489-E

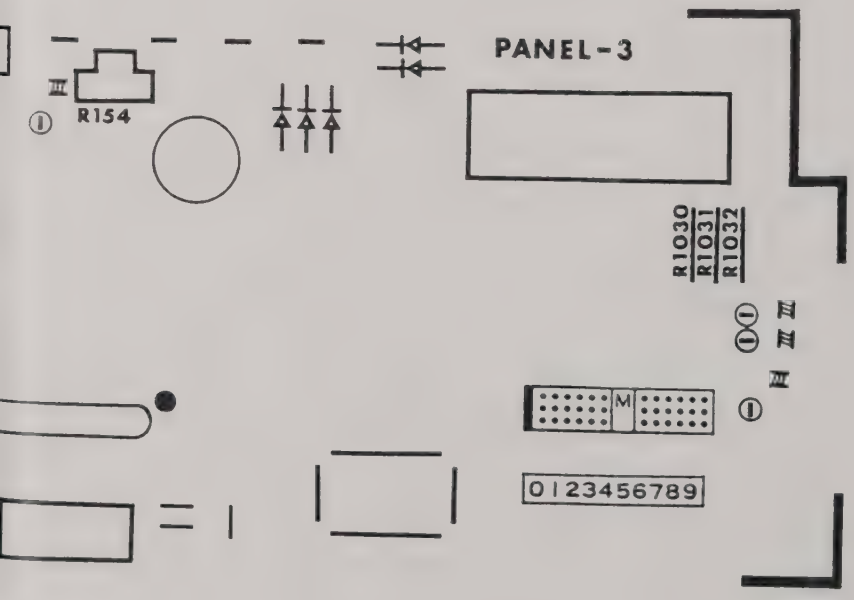

1490-E

L1400
U1414
CR1402
R104
C1407
U1426
U1415
J1412
J1401
27
26
U1427
CR1407
Y1408
R1403
CR
1405
R1418
Q1401
R1402
R1401
CR
1401
R1407
R1408
C1404
J1411
C1412
C1411
J1402
U1418
J1404

CPU BOAR

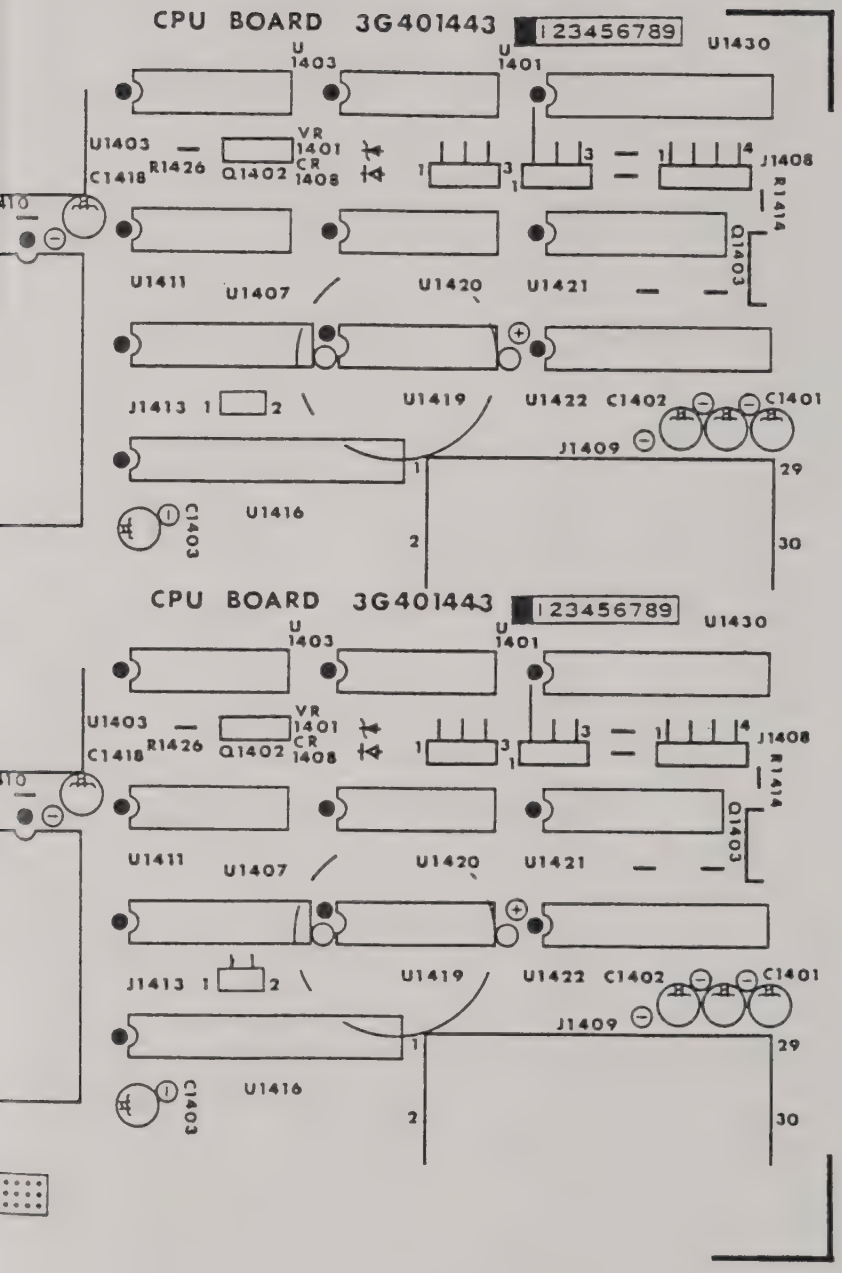
CPU BOARD 3G401443
123456789
U1430
U1403
U1401
U1403
C1418
R1426
Q1402
VR 1401
CR 1408
J1408
R1414
Q1403
U1411
U1407
U1420
U1421
J1413
U1419
U1422
C1402
C1401
J1409
29
30
U1416
C1403
CPU BOARD 3G401443
123456789
U1430
U1403
U1401
U1403
C1418
R1426
Q1402
VR 1401
CR 1408
J1408
R1414
Q1403
U1411
U1407
U1420
U1421
J1413
U1419
U1422
C1402
C1401
J1409
29
30
U1416
C1403

40-1443

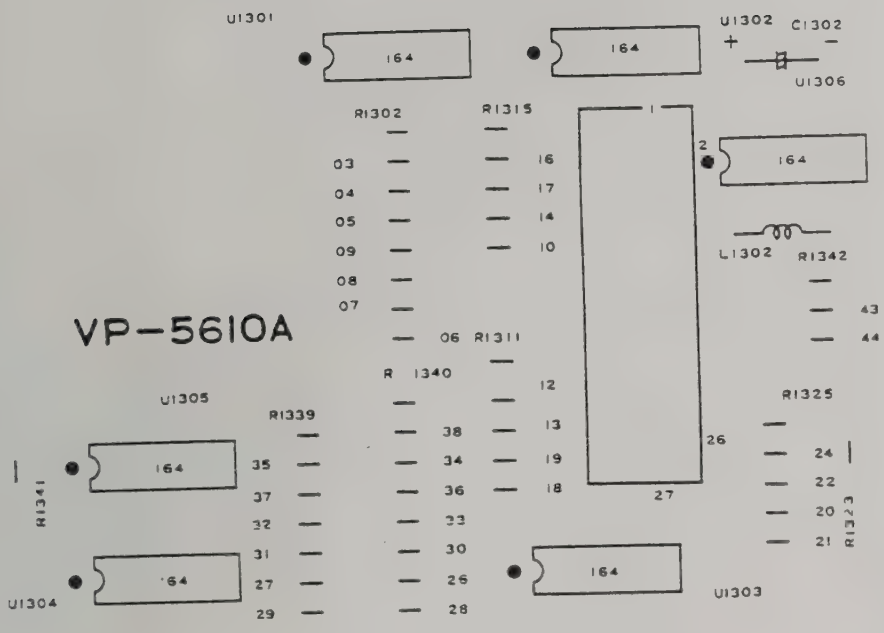
VP-5610A
U1301
164
164
U1302
C1302
U1306
R1302
R1315
03
04
05
09
08
07
06
16
17
14
10
1
2
164
L1302
R1342
43
44
R1340
R1311
12
38
34
36
33
30
26
28
13
19
18
27
26
R1325
24
22
20
21
R1323
U1305
R1339
35
37
32
31
27
29
164
R1341
164
U1304
164
U1303

PANEL-

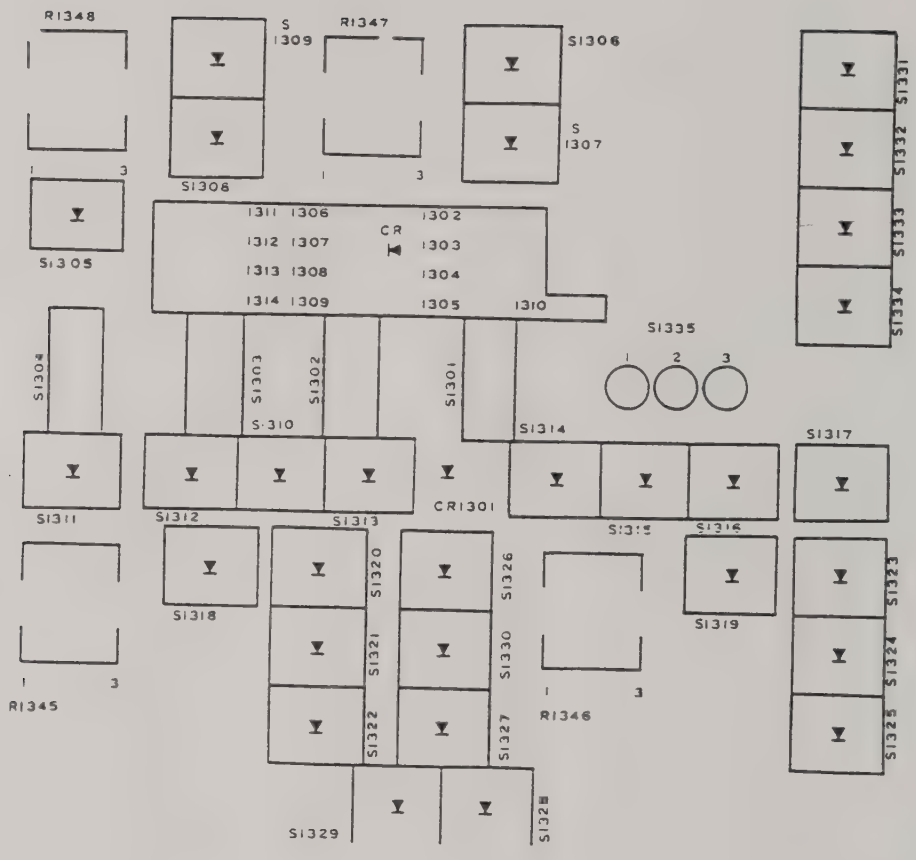
R1348
S 1309
R1347
S1306
S 1307
S1308
S1305
1311 1306
1312 1307
1313 1308
1314 1309
CR
1302
1303
1304
1305
1310
S1331
S1332
S1333
S1334
S1335
1 2 3
S1304
S1303
S1302
S1301
S1310
S1314
S1317
S1311
S1312
S1313
CR1301
S1315
S1316
S1318
S1320
S1321
S1322
S1326
S1330
S1327
S1319
S1323
S1324
S1325
R1345
R1346
S1329
S1328

-1405

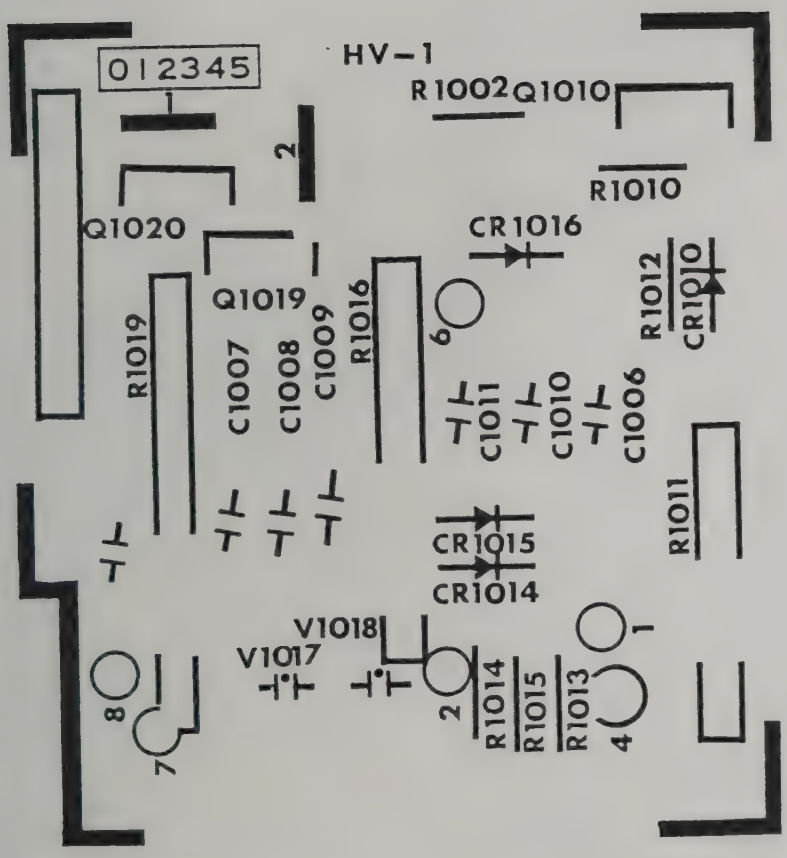

HV-1 2G-40-1489-B

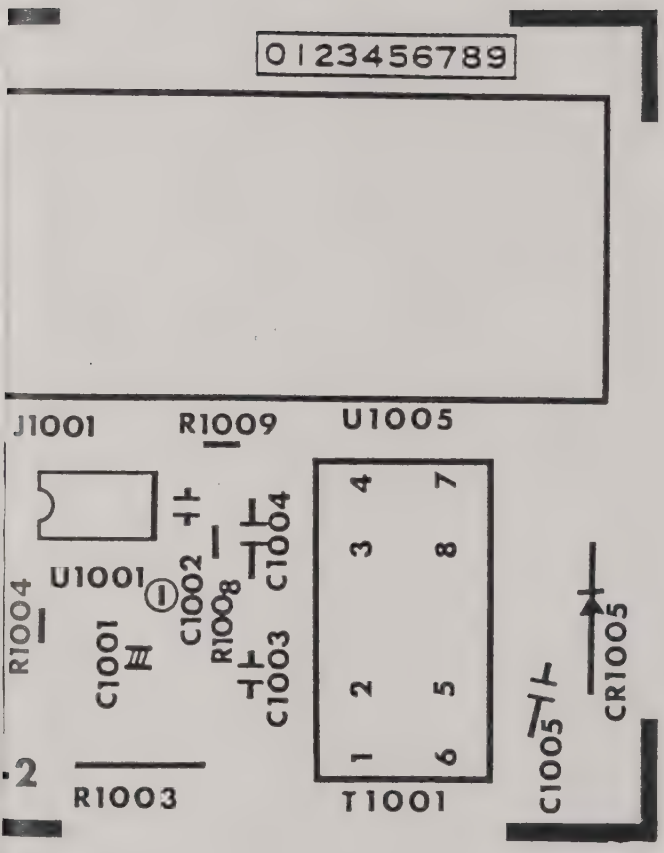

HV-2 2G-40-1489-C

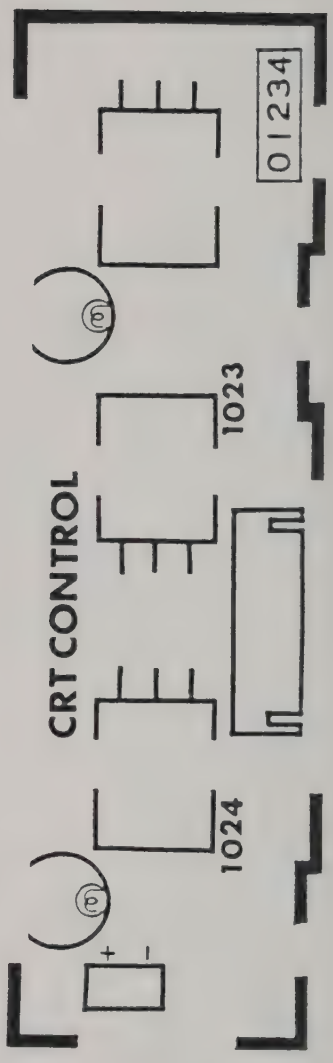

CRT CONTROL 2G-40-1489-E

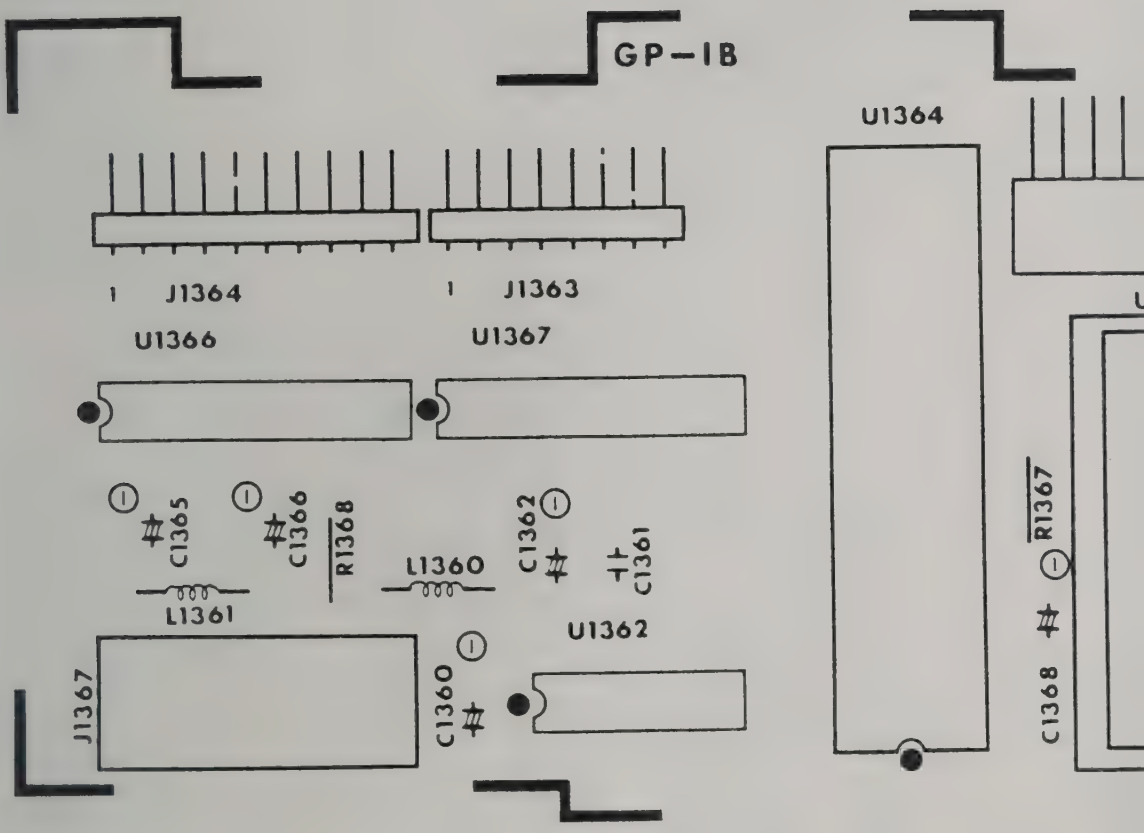
GP-1B
U1364
J1364
J1363
U1366
U1367
C1365
C1366
R1368
L1360
C1362
C1361
L1361
U1362
J1367
C1360
R1367
C1368

GP-1B

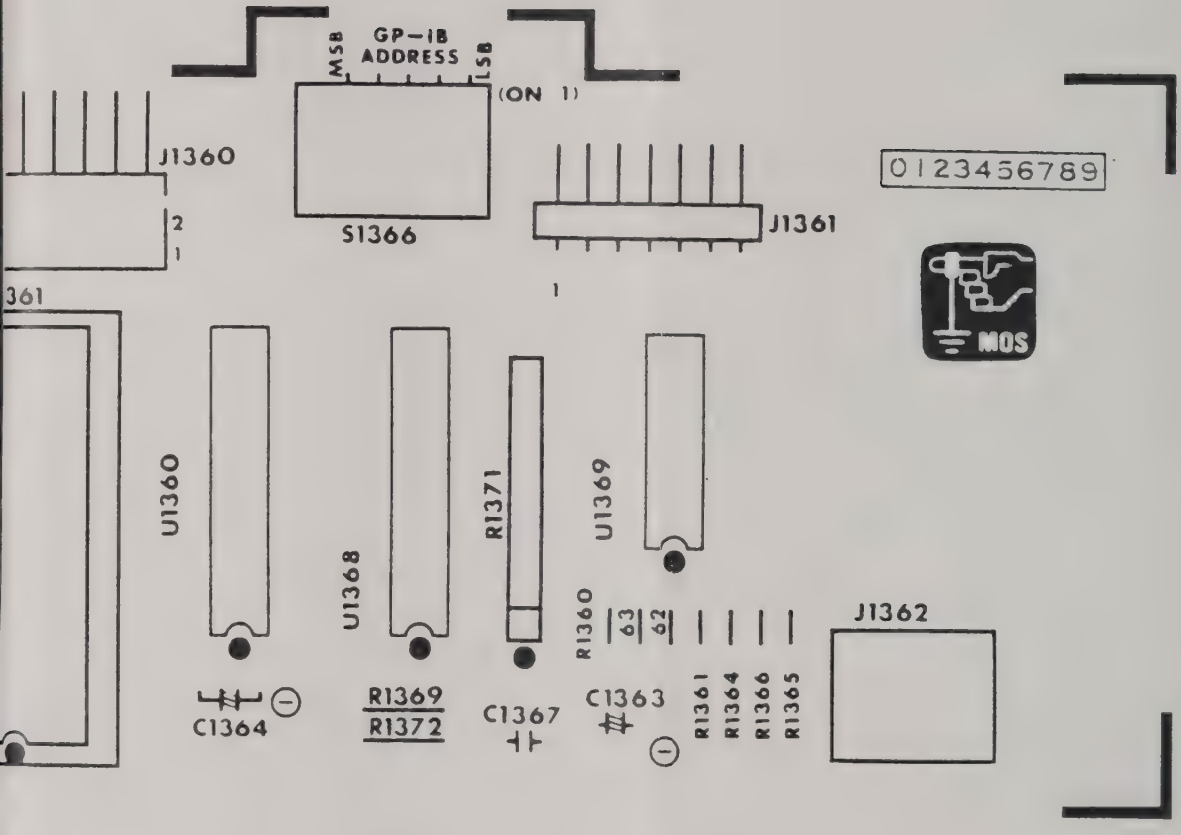
GP-IB
ADDRESS
MSB
LSB
(ON 1)
J1360
2
1
S1366
J1361
1
0123456789
MOS
361
U1360
U1368
R1371
U1369
R1360
63
62
J1362
C1364
R1369
R1372
C1367
C1363
R1361
R1364
R1366
R1365

2G-40-1531

8. CIRCUIT DIAGRAMS

		Page
• OVERALL INTER CONNECTION	[A1]	8- 1
• CH1 INPUT ATTENUATOR	[A2] [A3]	8- 2
• CH2 INPUT ATTENUATOR	[A4] [A5]	8- 3
• CH1 V PREAMP, V AUTO	[A8]	8- 4
• CH2 V PREAMP, V AUTO	[A8]	8- 5
• CH3 AMP & PRE OUT, TRIG AMP, V MODE	[A8] [A11]	8- 6
• V MAIN	[A10]	8- 7
• A & B SWEEP	[A8]	8- 8
• DELAY SWEEP & TIMING	[A8]	8- 9
• H AMP	[A8]	8-10
• SIDE PANEL	[A7] [A11] [A12] [A6] [A13] [A17]	8-11
• HV & Z AXIS	[A8] [A14] [A15]	8-12
• POWER	[A16]	8-13
• PANEL SWITCH	[A18] [A19]	8-14
• CHARACTER	[A20]	8-15
• CPU	[A21]	8-16
• GP-IB	[A22]	8-17

NOTES

▷ WHEN THE CIRCUIT IS DIVIDED INTO SOME UNITS AND AN IDENTIFYING NUMBER IS ASSIGNED TO EACH UNIT, REFERENCE DESIGNATORS IN EACH CIRCUIT DIAGRAM ARE GIVEN IN ABBREVIATED FORM. PREFIX WITH EACH IDENTIFYING NUMBER FOR COMPLETE DESCRIPTION.
EXAMPLES; A1C1, A6R3.

▷ RESISTANCE VALUES IN OHMS AND CAPACITANCE IN PICOFARADS(FROM 1 TO 9,999) OR MICROFARADS (FROM 0.01 TO 0.99) UNLESS OTHERWISE NOTED.

▷ POWER RATINGS AND RESISTANCE TOLERANCES OF FIXED RESISTORS ARE 1/8 WATTS AND ±5 % UNLESS OTHERWISE NOTED.

▷ ✡ FACTORY REWORKED OR CHECKED COMPONENTS.

▷ ✱ VALUE SELECTED AT FACTORY, NOMINAL VALUE SHOWN.

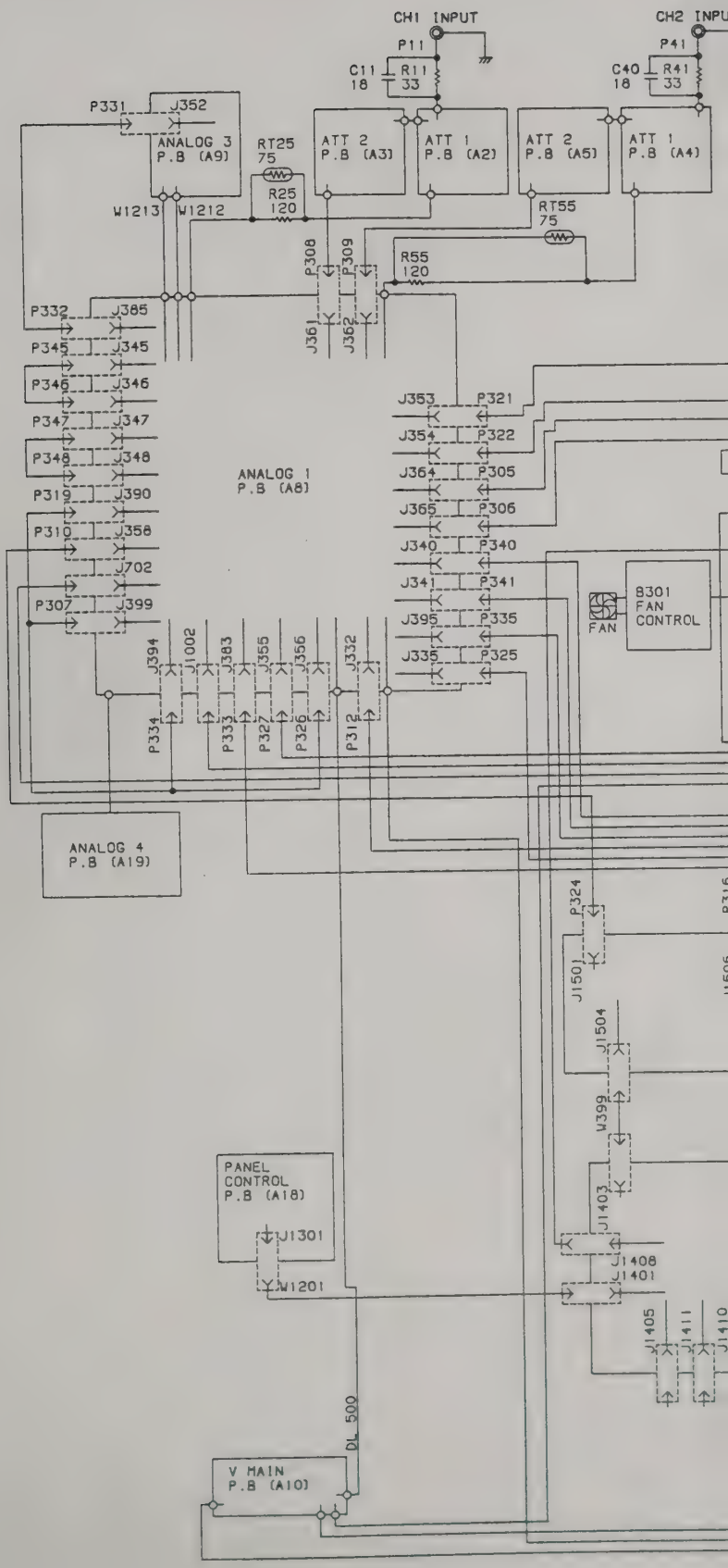
CH1 INPUT
CH2 INPU
P11
P41
C11 18
R11 33
C40 18
R41 33
P331
J352
ANALOG 3 P.B (A9)
RT25 75
R25 120
ATT 2 P.B (A3)
ATT 1 P.B (A2)
ATT 2 P.B (A5)
ATT 1 P.B (A4)
RT55 75
R55 120
W1213
W1212
P308
P309
J361
J362
P332
J385
P345
J345
P346
J346
P347
J347
P348
J348
P319
J390
P310
J358
J702
P307
J399
ANALOG 1 P.B (A8)
J353
P321
J354
P322
J364
P305
J365
P306
J340
P340
J341
P341
J395
P335
J335
P325
8301 FAN CONTROL
FAN
J394
J1002
J383
J355
J356
J332
P334
P333
P327
P326
P312
ANALOG 4 P.B (A19)
P324
J1501
J1504
W399
J1403
PANEL CONTROL P.B (A18)
J1301
W1201
J1408
J1401
J1405
J1411
DL 500
V MAIN P.B (A10)

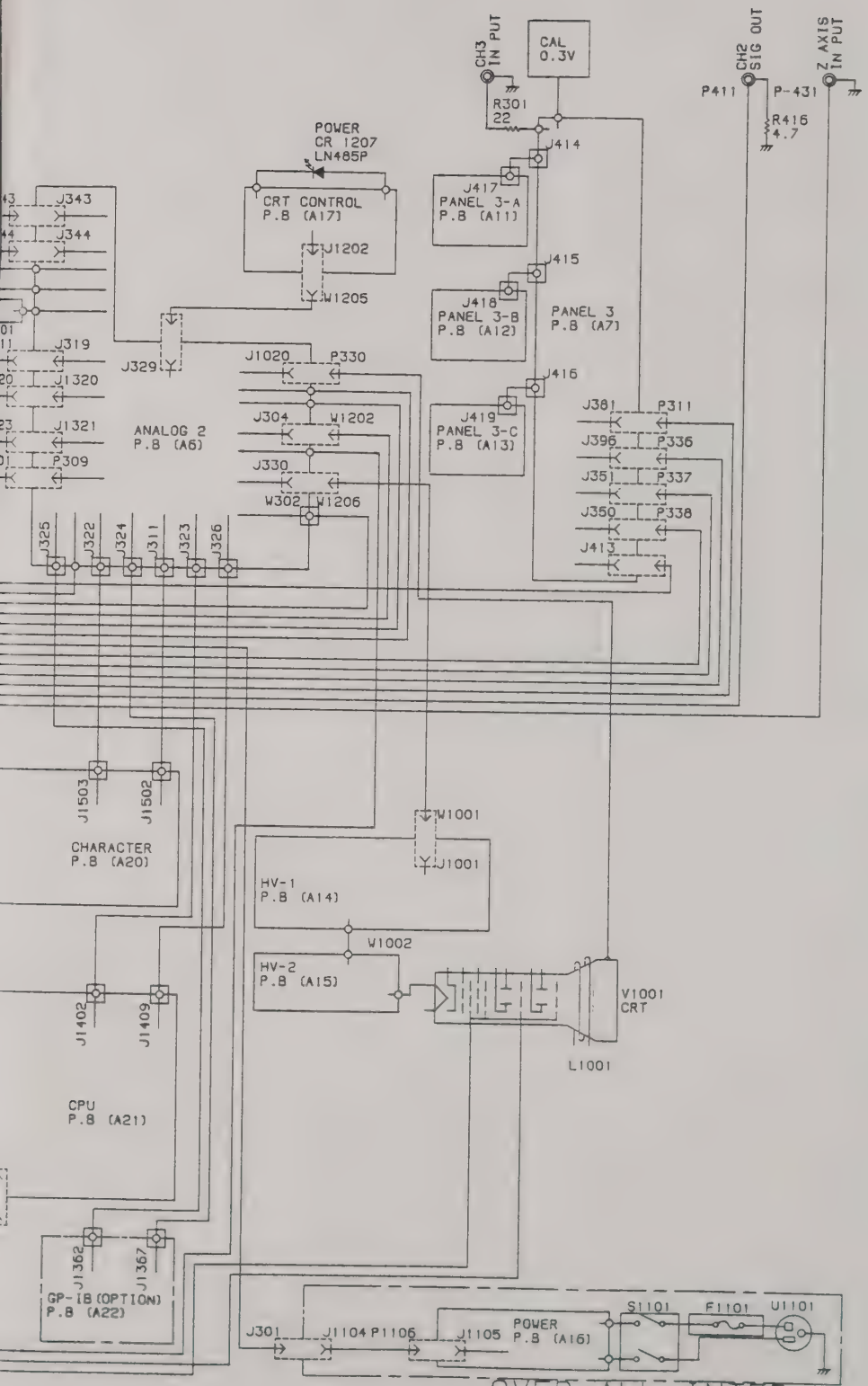

OVER ALL INTER CONNECTION (A1) 1

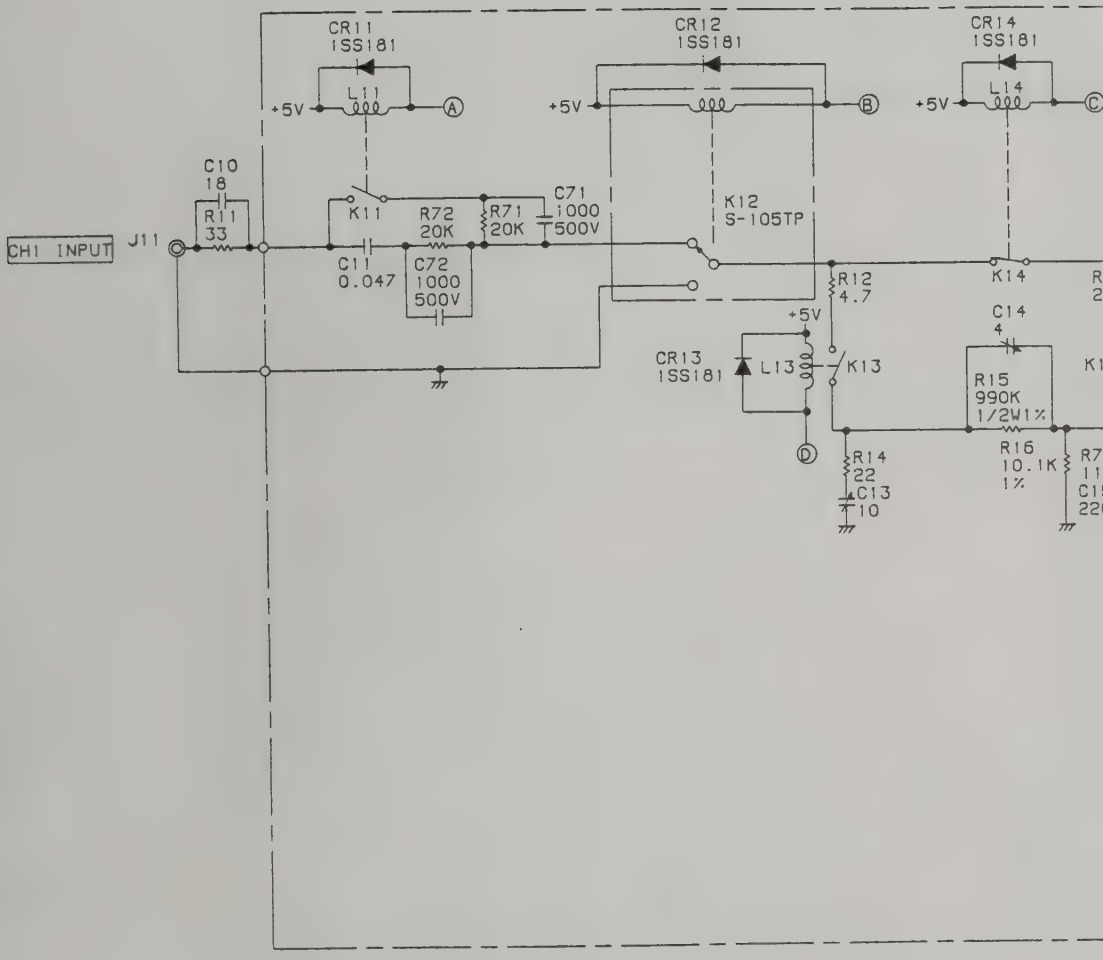
CR11
1SS181
L11
+5V
A
CR12
1SS181
+5V
B
CR14
1SS181
L14
+5V
C
C10
18
R11
33
CH1 INPUT
J11
K11
R72
20K
R71
20K
C71
1000
500V
C11
0.047
C72
1000
500V
K12
S-105TP
R12
4.7
K14
+5V
CR13
1SS181
L13
K13
C14
4
R15
990K
1/2W1%
R16
10.1K
1%
R14
22
C13
10
D

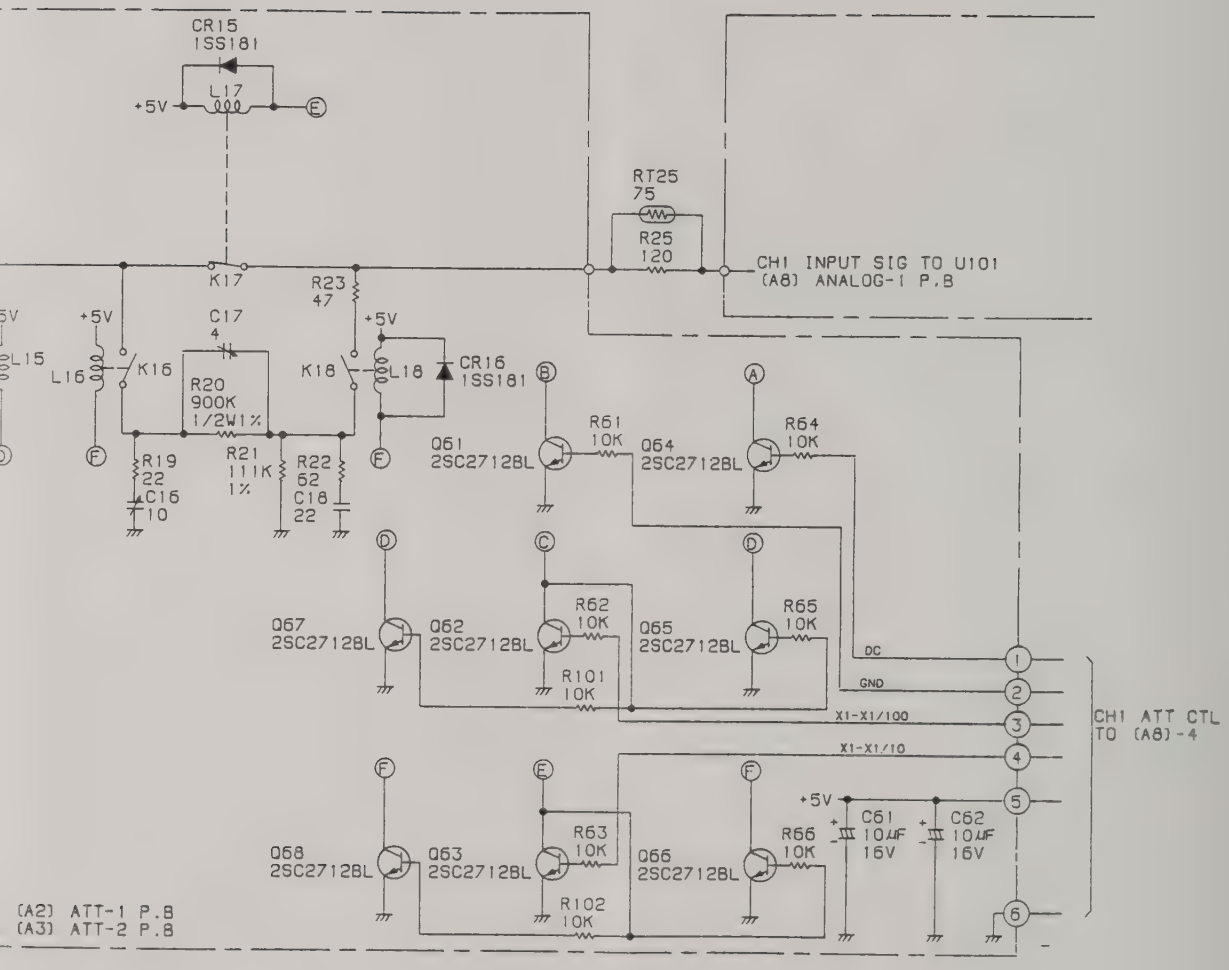

CH1 INPUT ATTENUATOR (A2) (A3) 2

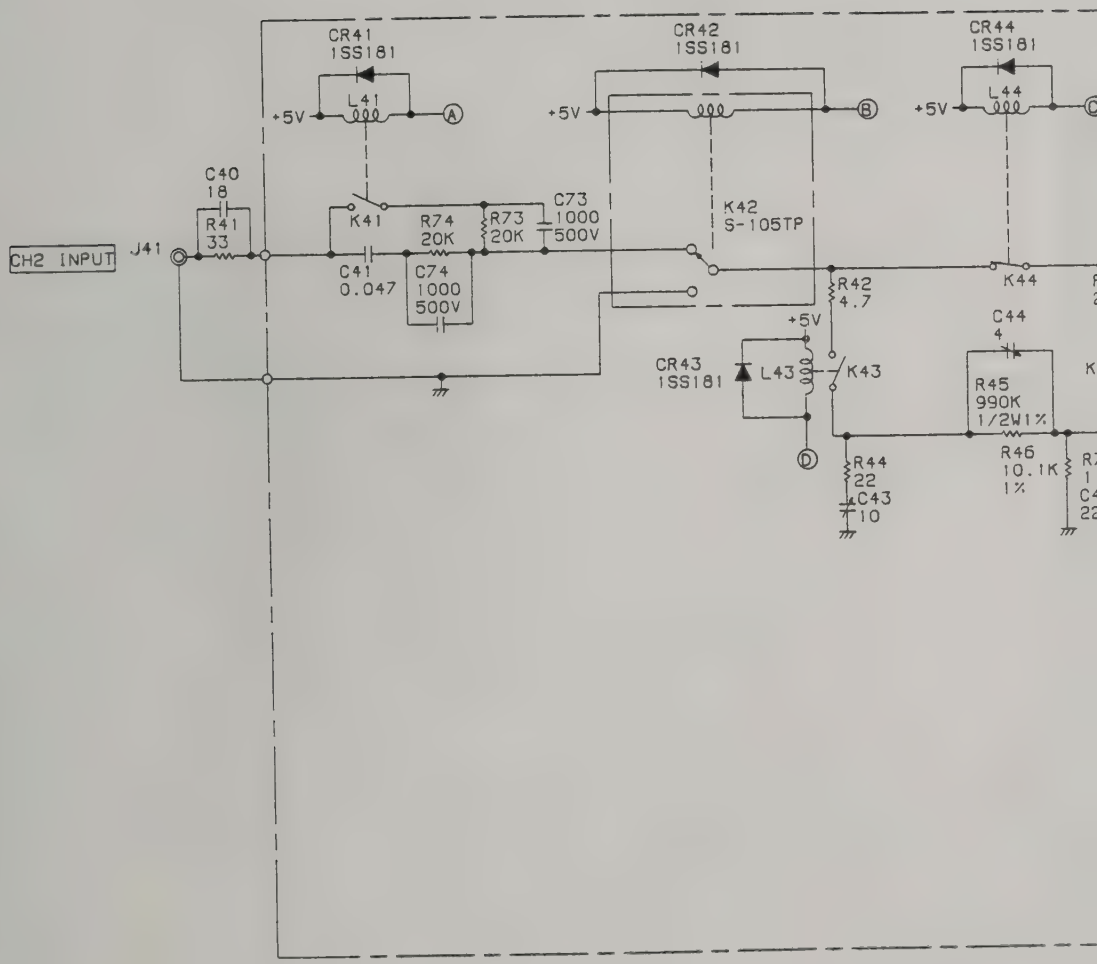
CR41
1SS181
CR42
1SS181
CR44
1SS181
+5V
L41
L44
A
B
C
C40
18
R41
33
CH2 INPUT
J41
K41
R74
20K
R73
20K
C73
1000
500V
C41
0.047
C74
1000
500V
K42
S-105TP
K44
R42
4.7
+5V
CR43
1SS181
L43
K43
C44
4
R45
990K
1/2W1%
R46
10.1K
1%
D
R44
22
C43
10

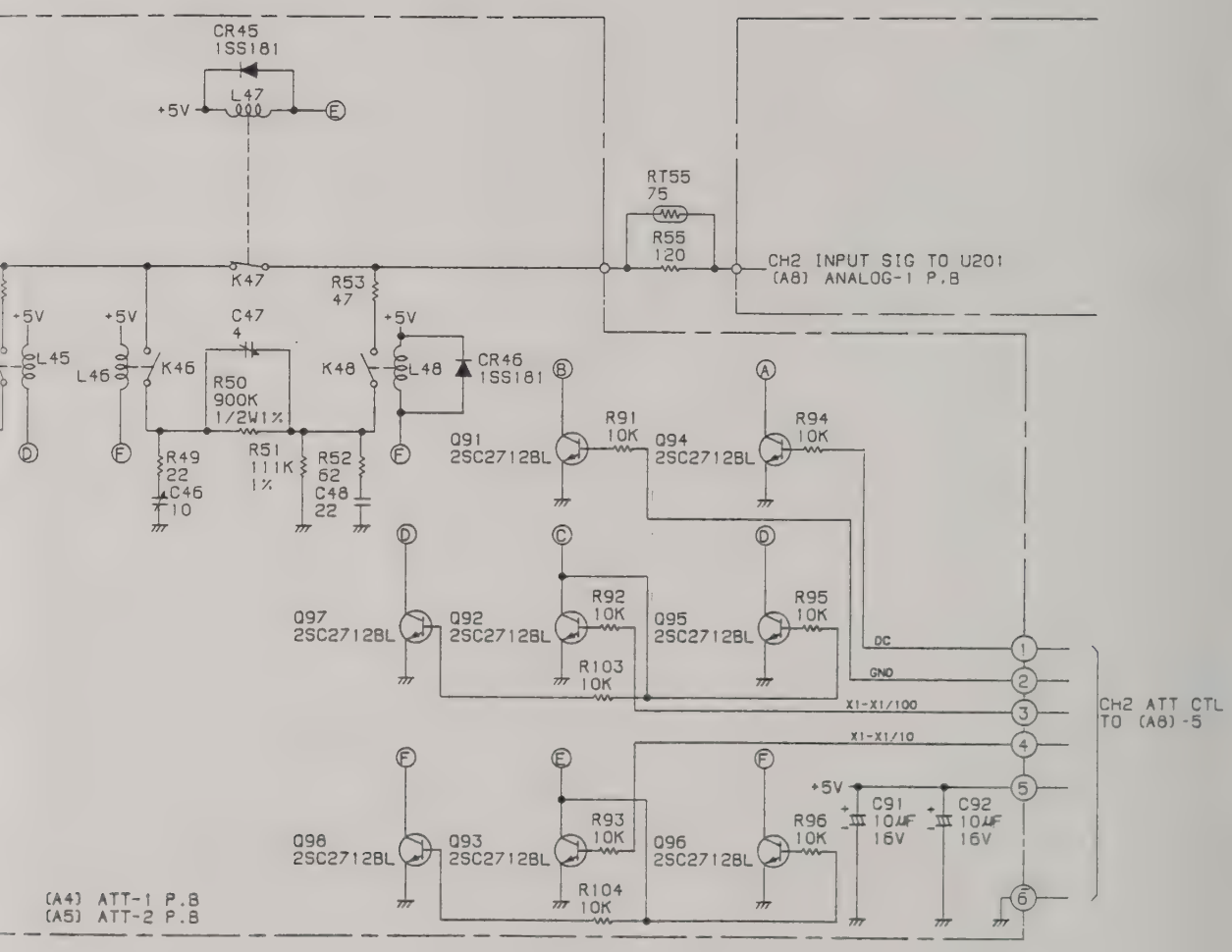

CH2 INPUT ATTENUATOR (A4) (A5) 3

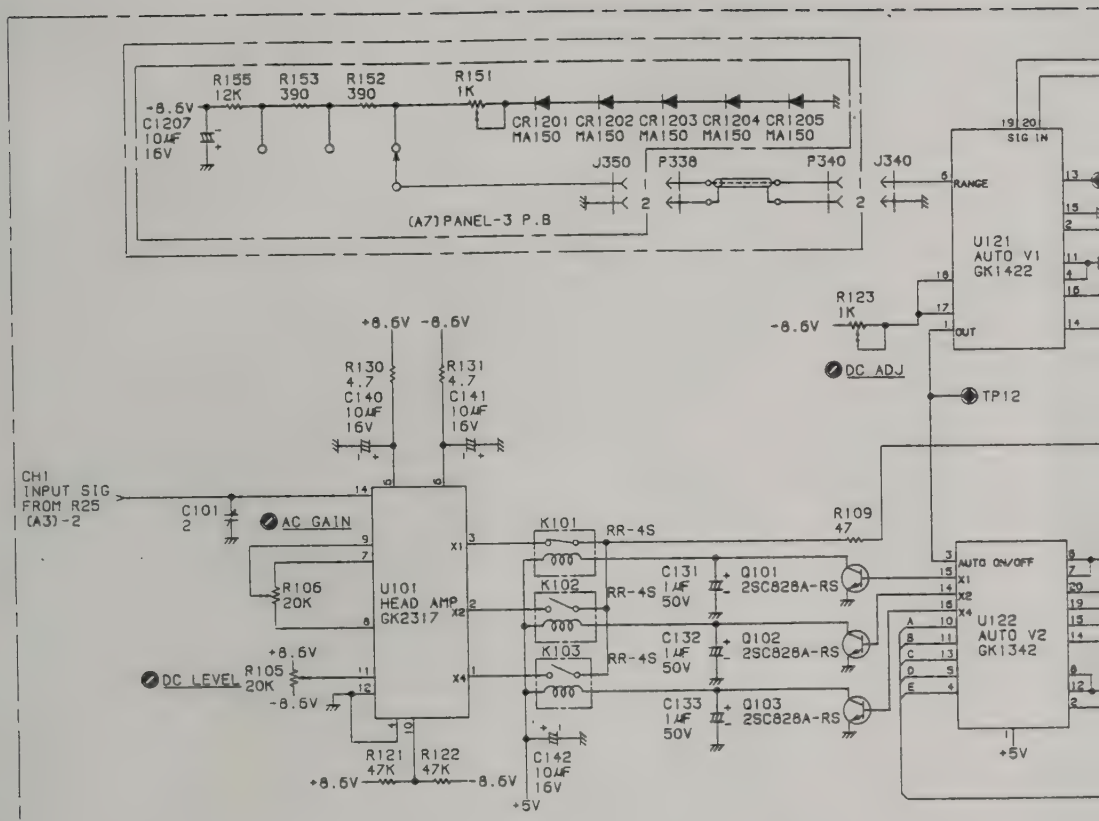
R155 12K
R153 390
R152 390
R151 1K
-8.6V
C1207 10µF 16V
CR1201 CR1202 CR1203 CR1204 CR1205
MA150 MA150 MA150 MA150 MA150
J350
P338
P340
J340
(A7) PANEL-3 P.B
U121 AUTO V1 GK1422
SIG IN
RANGE
OUT
R123 1K
DC ADJ
TP12
+8.6V -8.6V
R130 4.7
R131 4.7
C140 10µF 16V
C141 10µF 16V
CH1 INPUT SIG FROM R25 (A3)-2
C101
AC GAIN
U101 HEAD AMP GK2317
R106 20K
DC LEVEL
R105 20K
R121 47K
R122 47K
K101
K102
K103
RR-4S
R109 47
C131 1µF 50V
C132 1µF 50V
C133 1µF 50V
Q101 2SC828A-RS
Q102 2SC828A-RS
Q103 2SC828A-RS
C142 10µF 16V
+5V
U122 AUTO V2 GK1342
AUTO ON/OFF
(A8) ANALOG-1 P.B

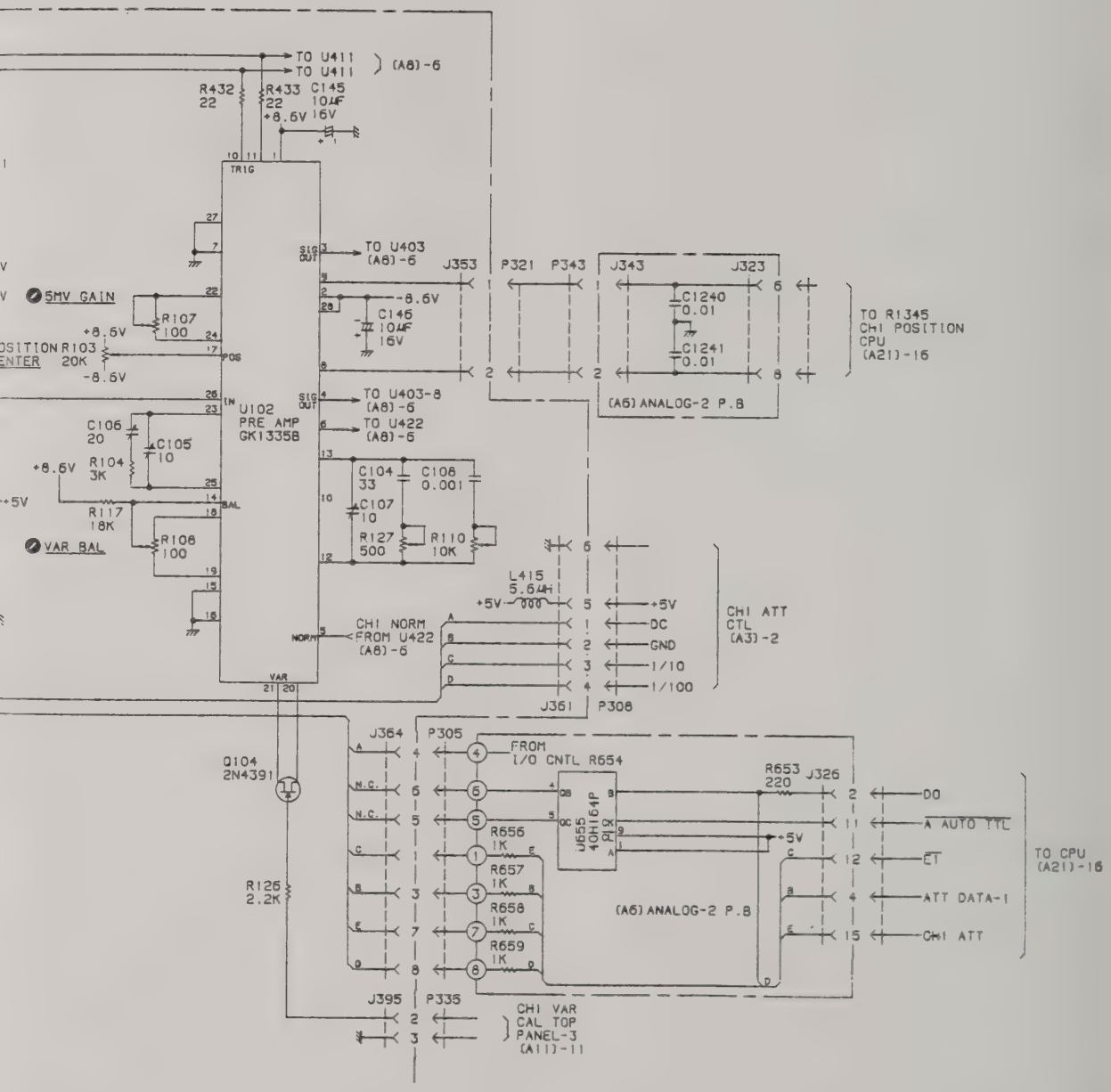

CH1 V PRE AMP
V AUTO (A8)-1 4

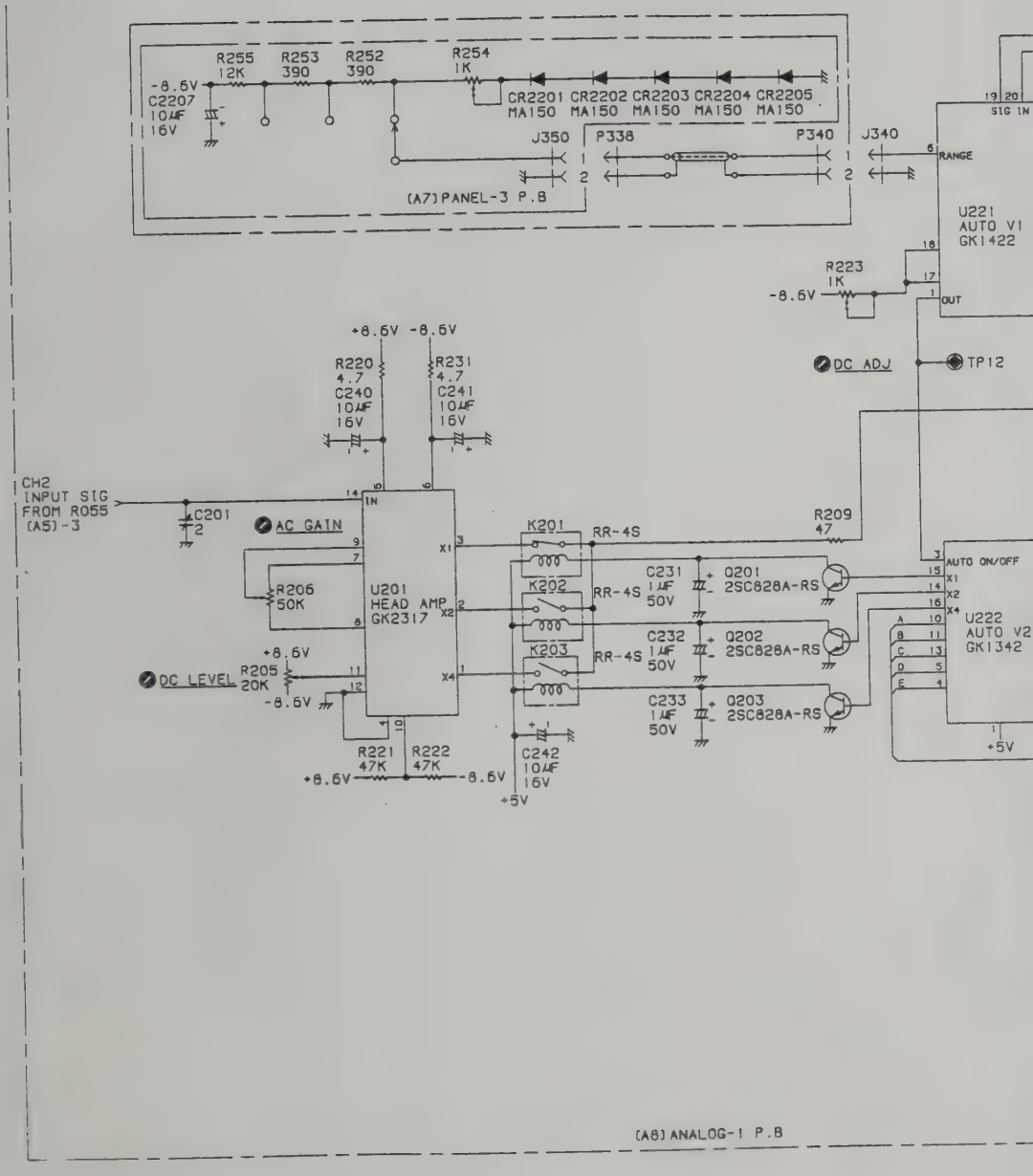
R255 12K
R253 390
R252 390
R254 1K
-8.6V
C2207 10μF 16V
CR2201 CR2202 CR2203 CR2204 CR2205
MA150 MA150 MA150 MA150 MA150
J350
P338
P340
J340
RANGE
(A7) PANEL-3 P.B
U221 AUTO V1 GK1422
R223 1K
-8.6V
OUT
DC ADJ
TP12
+8.6V -8.6V
R220 4.7 C240 10μF 16V
R231 4.7 C241 10μF 16V
CH2 INPUT SIG FROM R055 (A5)-3
C201 2
AC GAIN
U201 HEAD AMP GK2317
R206 50K
DC LEVEL
R205 20K
+8.6V
-8.6V
R221 47K
R222 47K
C242 10μF 16V
+5V
K201
K202
K203
RR-4S
R209 47
C231 1μF 50V
C232 1μF 50V
C233 1μF 50V
Q201 2SC828A-RS
Q202 2SC828A-RS
Q203 2SC828A-RS
AUTO ON/OFF
U222 AUTO V2 GK1342
SIG IN
(A8) ANALOG-1 P.B

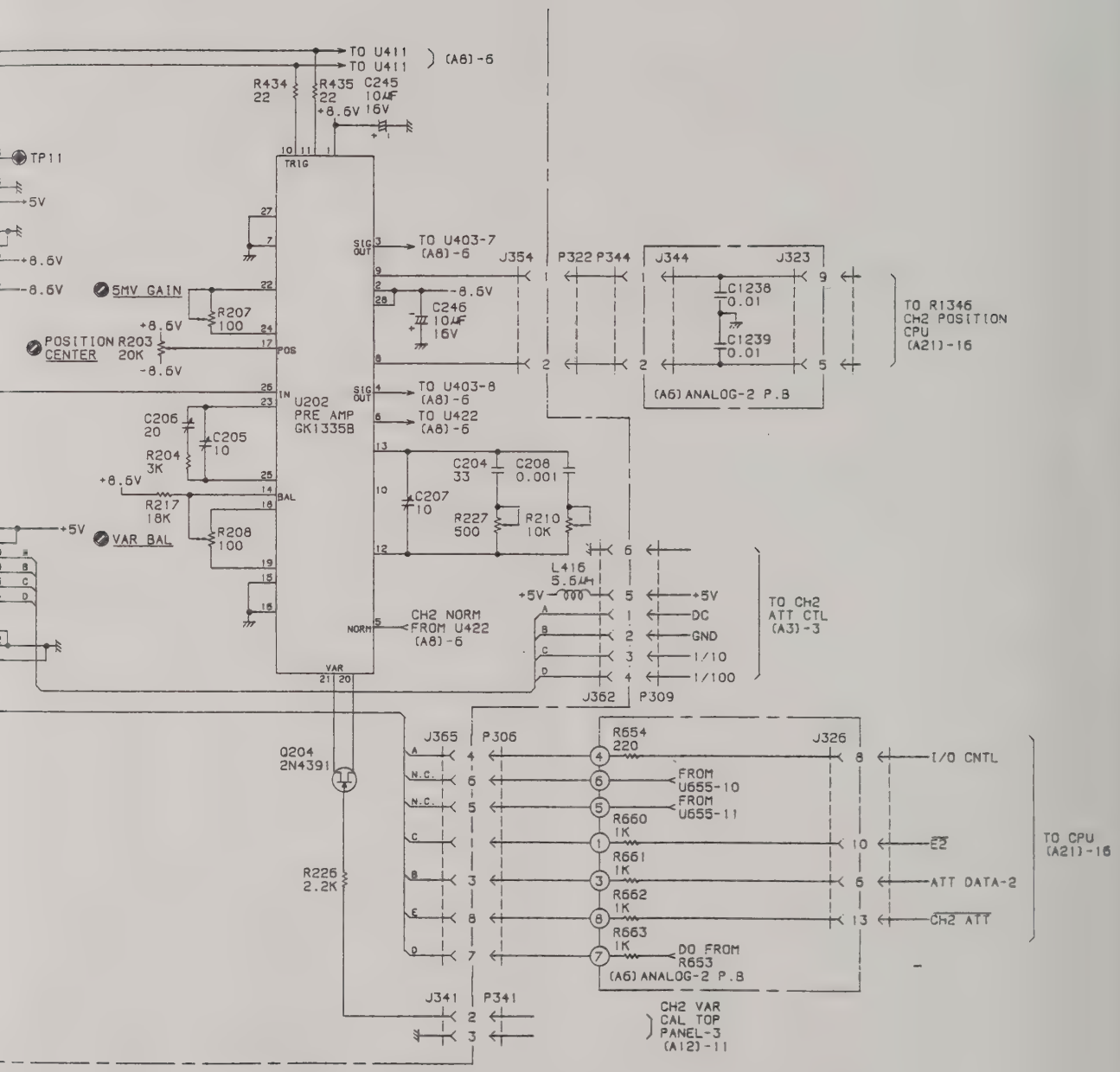

CH2 V PRE AMP
V AUTO (A8)-2 5

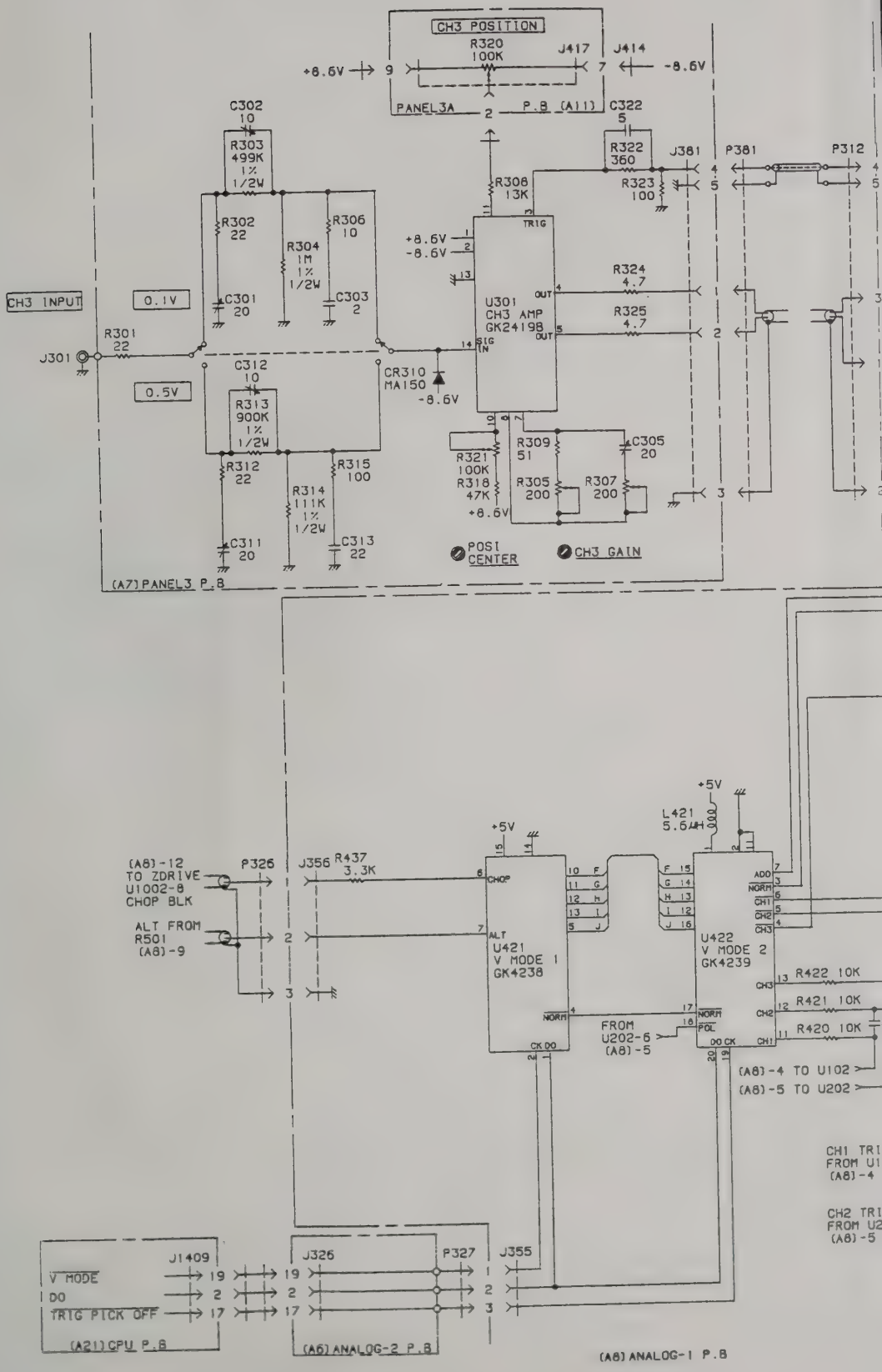
CH3 POSITION
R320
100K
J417
J414
+8.6V
-8.6V
PANEL3A
P.8 (A11)
C302
10
R303
499K
1%
1/2W
C322
5
R322
360
J381
P381
P312
R323
100
R308
13K
R302
22
R306
10
R304
1M
1%
1/2W
+8.6V
-8.6V
TRIG
R324
4.7
CH3 INPUT
0.1V
C301
20
C303
2
U301
CH3 AMP
GK24198
R325
4.7
J301
R301
22
SIG IN
OUT
C312
10
CR310
MA150
-8.6V
0.5V
R313
900K
1%
1/2W
R309
51
C305
20
R321
100K
R318
47K
R312
22
R314
111K
1%
1/2W
R315
100
R305
200
R307
200
+8.6V
C311
20
C313
22
POSI
CENTER
CH3 GAIN
(A7) PANEL3 P.8
+5V
L421
5.6μH
(A8)-12
TO ZDRIVE
U1002-8
CHOP BLK
P326
J356
R437
3.3K
CHOP
ALT FROM
R501
(A8)-9
ALT
U421
V MODE 1
GK4238
U422
V MODE 2
GK4239
ADD
NORM
CH1
CH2
CH3
R422 10K
R421 10K
R420 10K
FROM
U202-6
(A8)-5
POL
DO CK
CK DO
(A8)-4 TO U102
(A8)-5 TO U202
CH1 TRI
FROM U1
(A8)-4
CH2 TRI
FROM U2
(A8)-5
J1409
V MODE
DO
TRIG PICK OFF
(A21) CPU P.8
J326
P327
J355
(A6) ANALOG-2 P.8
(A8) ANALOG-1 P.8

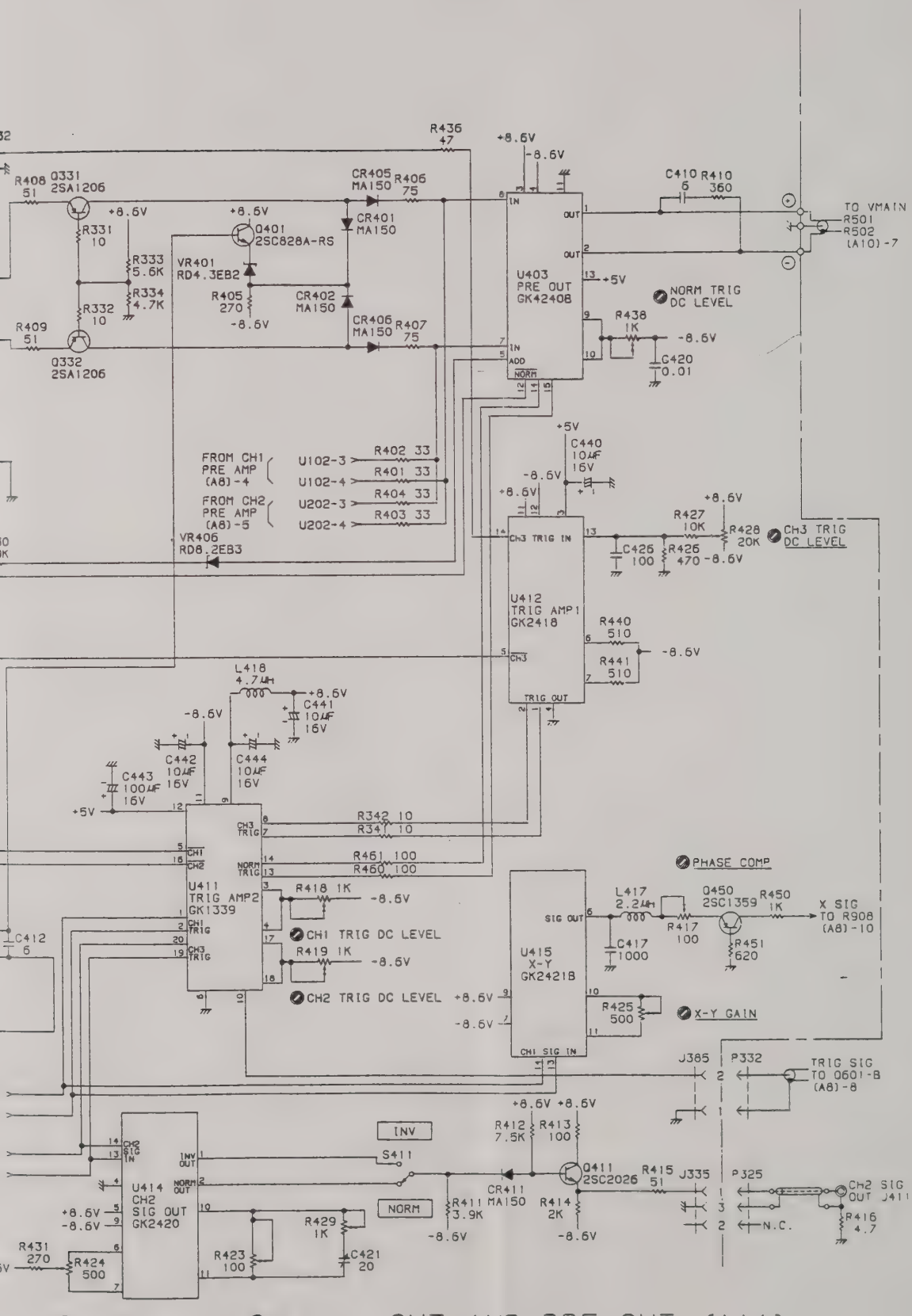

CH3 AMP&PRE OUT (A11)
TRIG AMP
V MODE (A8) 6

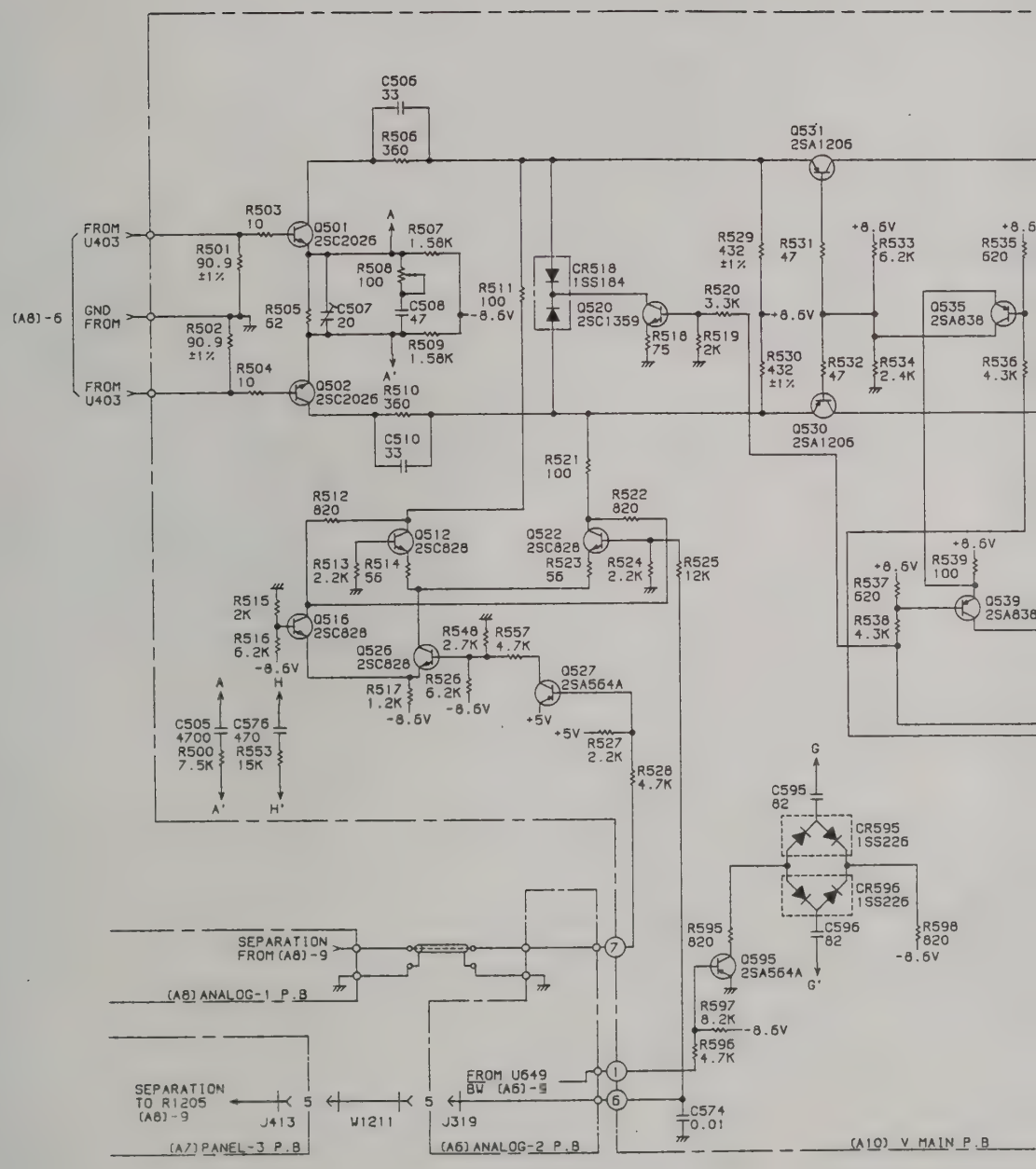
C506
33
R506
360
Q531
2SA1206
R503
10
FROM
U403
Q501
2SC2026
R507
1.58K
R501
90.9
±1%
R508
100
R511
100
-8.6V
CR518
1SS184
Q520
2SC1359
R529
432
±1%
R531
47
+8.6V
R533
6.2K
R535
620
R520
3.3K
R518
75
R519
2K
Q535
2SA838
(A8)-6
GND
FROM
R505
62
C507
20
C508
47
R509
1.58K
R502
90.9
±1%
R504
10
FROM
U403
Q502
2SC2026
R510
360
R530
432
±1%
R532
47
R534
2.4K
R536
4.3K
Q530
2SA1206
C510
33
R521
100
R512
820
R522
820
Q512
2SC828
Q522
2SC828
R513
2.2K
R514
56
R523
56
R524
2.2K
R525
12K
+8.6V
R539
100
+8.6V
R537
620
R538
4.3K
Q539
2SA838
R515
2K
Q516
2SC828
R516
6.2K
-8.6V
R548
2.7K
R557
4.7K
Q526
2SC828
R517
1.2K
-8.6V
R526
6.2K
-8.6V
Q527
2SA564A
+5V
+5V
R527
2.2K
R528
4.7K
A
A'
H
H'
C505
4700
R500
7.5K
C576
470
R553
15K
G
C595
82
CR595
1SS226
CR596
1SS226
C596
82
R595
820
R598
820
-8.6V
Q595
2SA564A
G'
R597
8.2K
-8.6V
R596
4.7K
SEPARATION
FROM (A8)-9
(A8) ANALOG-1 P.B
7
FROM U649
BW (A6)-9
1
6
SEPARATION
TO R1205
(A8)-9
5
J413
W1211
5
J319
C574
0.01
(A7) PANEL-3 P.B
(A6) ANALOG-2 P.B
(A10) V MAIN P.B

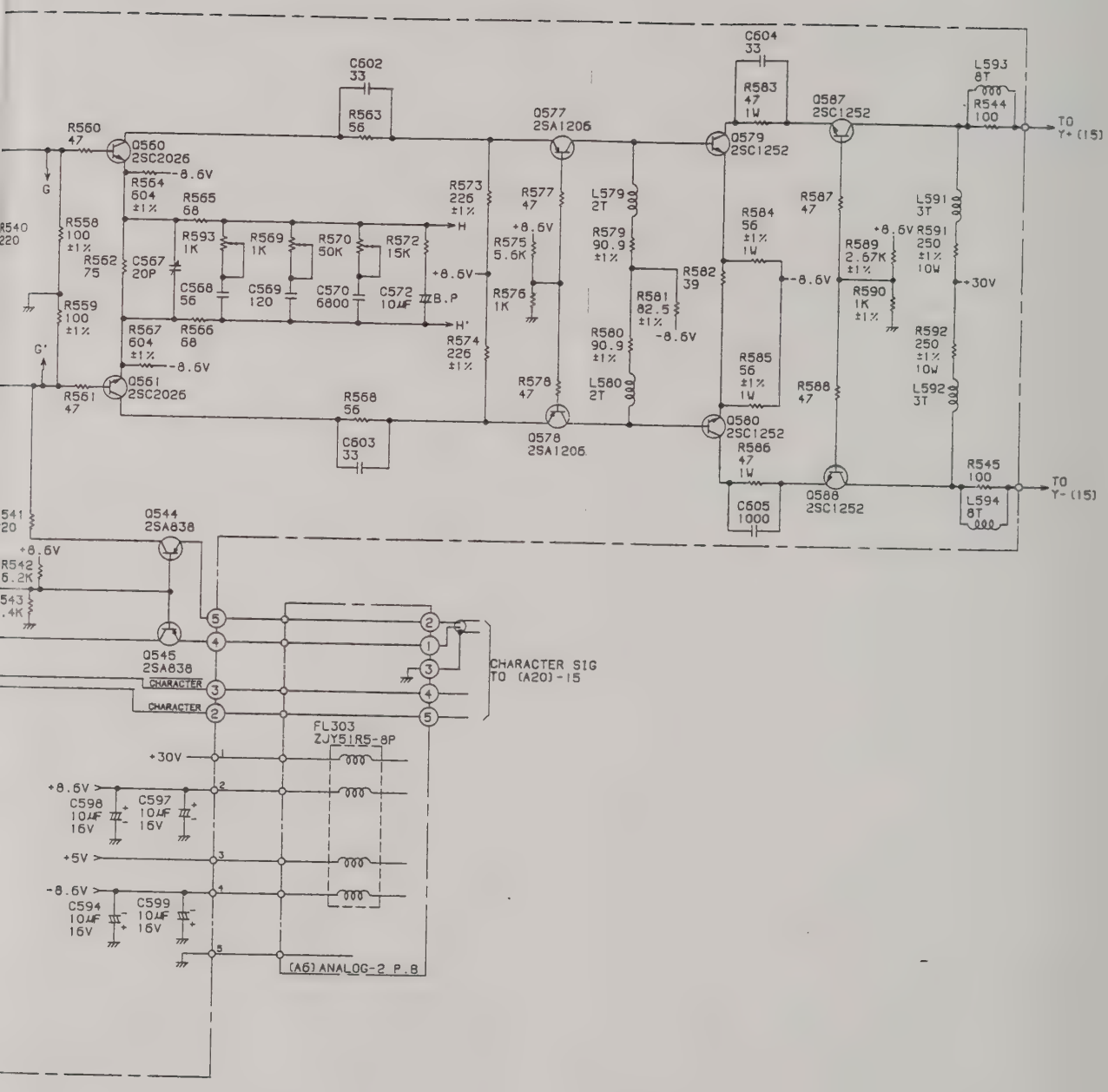
C602
33
R563
56
Q577
2SA1206
C604
33
R583
47
1W
Q587
2SC1252
L593
8T
R544
100
TO
Y+ (15)
R560
47
Q560
2SC2026
-8.6V
G
R564
604
±1%
R565
68
R573
226
±1%
R577
47
L579
2T
R584
56
±1%
1W
R587
47
L591
3T
R540
220
R558
100
±1%
R562
75
R567
20P
R593
1K
R569
1K
R570
50K
R572
15K
H
+8.6V
R575
5.6K
R579
90.9
±1%
R582
39
-8.6V
R589
2.67K
±1%
+8.6V
R591
250
±1%
10W
+30V
R559
100
±1%
C568
56
C569
120
C570
6800
C572
10μF
B.P
R576
1K
R581
82.5
±1%
-8.6V
R590
1K
±1%
G'
R567
604
±1%
R566
68
H'
R574
226
±1%
R580
90.9
±1%
R585
56
±1%
1W
R592
250
±1%
10W
-8.6V
R561
47
Q561
2SC2026
R578
47
L580
2T
R588
47
L592
3T
R568
56
C603
33
Q578
2SA1206
Q580
2SC1252
R586
47
1W
R545
100
TO
Y- (15)
Q588
2SC1252
C605
1000
L594
8T
541
20
Q544
2SA838
+8.6V
R542
6.2K
543
.4K
Q545
2SA838
CHARACTER
CHARACTER
CHARACTER SIG
TO (A20)-15
FL303
ZJY51R5-8P
+30V
+8.6V
C598
10μF
16V
C597
10μF
16V
+5V
-8.6V
C594
10μF
16V
C599
10μF
16V
(A6) ANALOG-2 P.8

V MAIN (10) 7

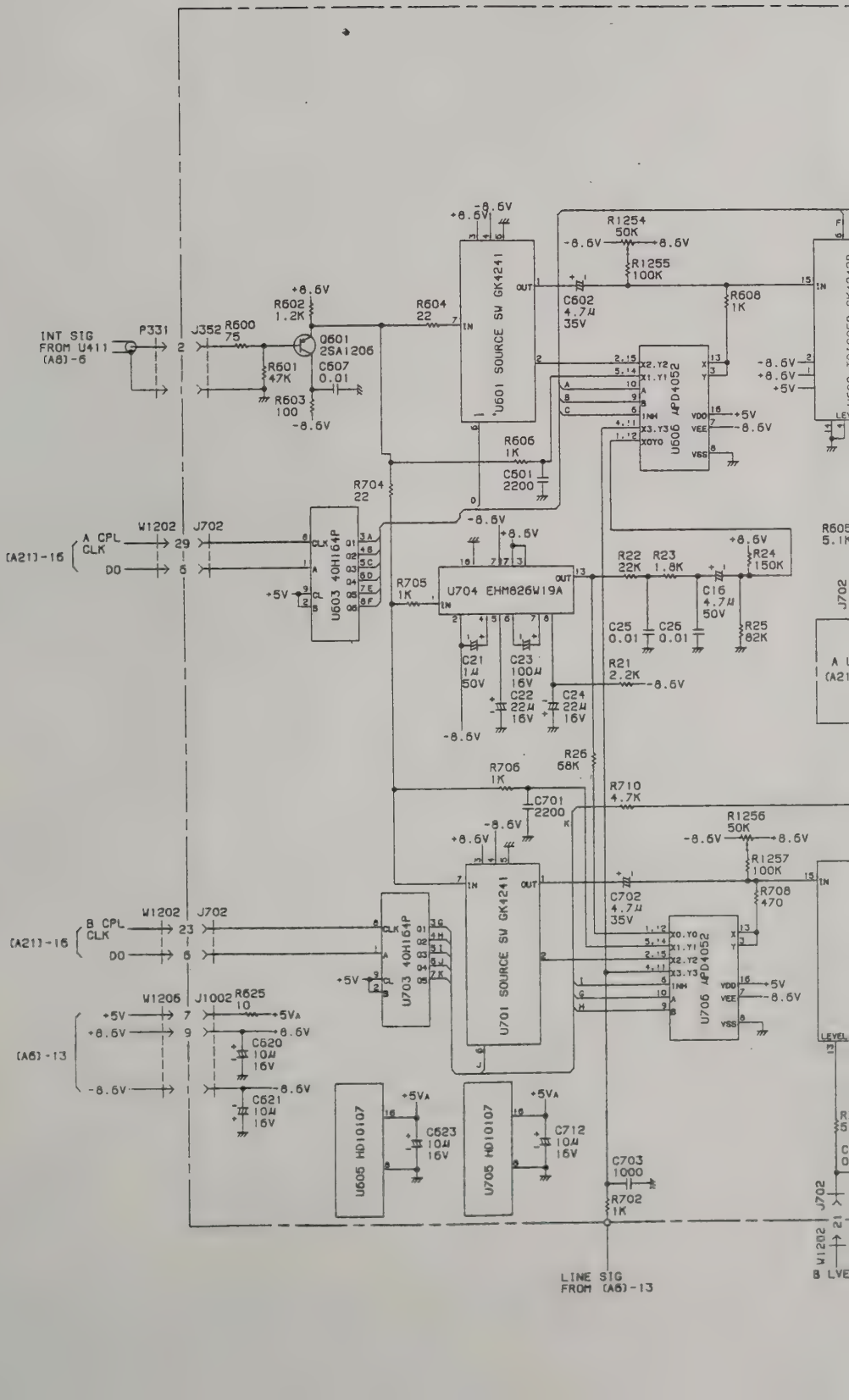
INT SIG FROM U411 (A8)-6
P331
J352
R600 75
Q601 2SA1206
R601 47K
C507 0.01
R603 100
R602 1.2K
R604 22
U601 SOURCE SW GK4241
C602 4.7μ 35V
R1254 50K
R1255 100K
R608 1K
U606 μPD4052
R606 1K
C501 2200
R704 22
U603 40H164P
W1202
J702
A CPL CLK
DO
[A21]-16
R705 1K
U704 EHM826W19A
R22 22K
R23 1.8K
R24 150K
C16 4.7μ 50V
C25 0.01
C26 0.01
R25 82K
C21 1μ 50V
C23 100μ 16V
C22 22μ 16V
C24 22μ 16V
R21 2.2K
R706 1K
C701 2200
R26 68K
R710 4.7K
R1256 50K
R1257 100K
R708 470
C702 4.7μ 35V
U701 SOURCE SW GK4241
U706 μPD4052
B CPL CLK
DO
U703 40H164P
W1205
J1002
R625 10
C620 10μ 16V
C621 10μ 16V
[A6]-13
U605 HD10107
U705 HD10107
C623 10μ 16V
C712 10μ 16V
C703 1000
R702 1K
LINE SIG FROM (A6)-13
-8.6V
+8.6V
+5V
+5VA

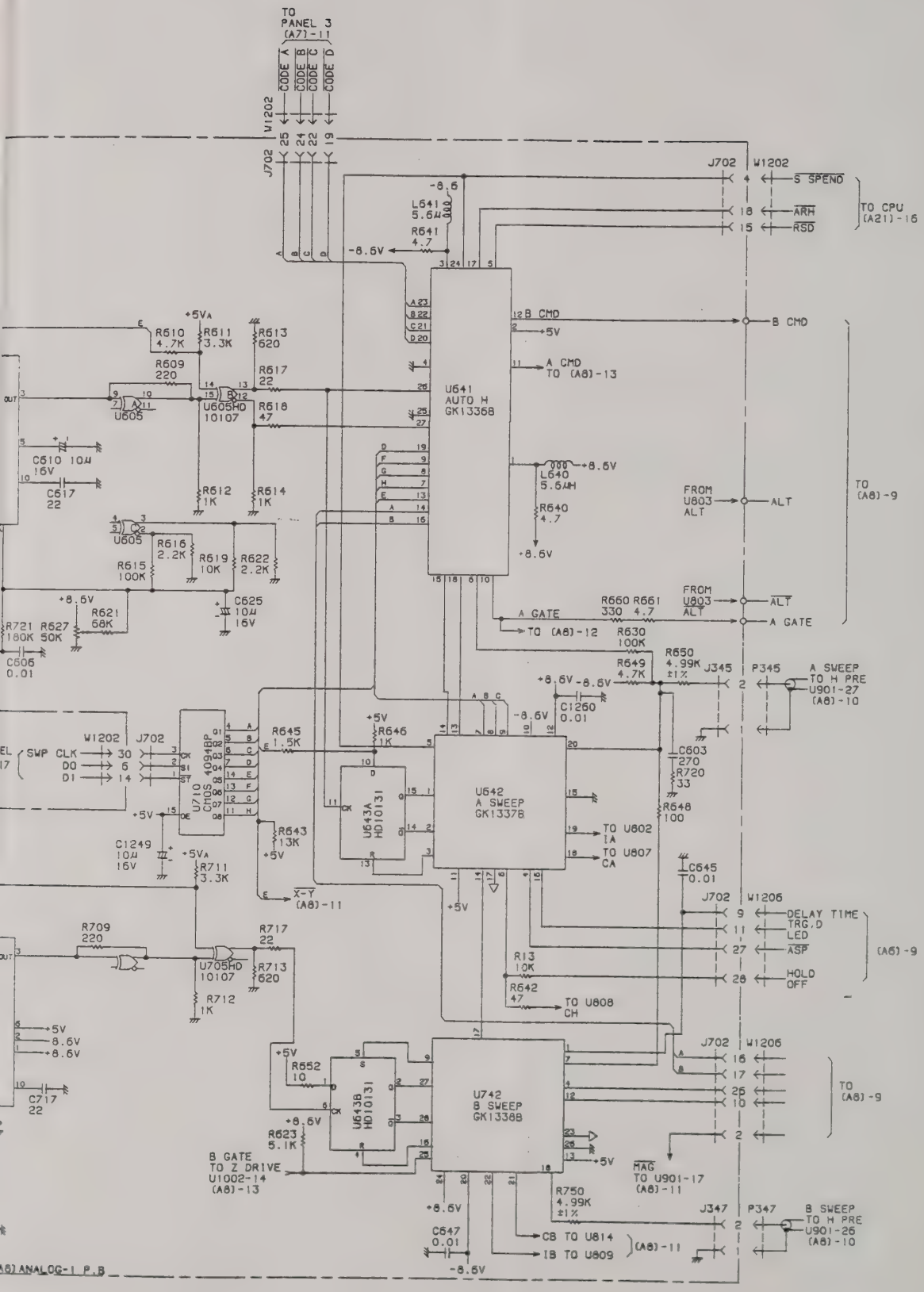
TO PANEL 3 (A7)-11
CODE A
CODE B
CODE C
CODE D
W1202
J702
J702 W1202
S SPEND
ARH
RSD
TO CPU (A21)-16
L641 5.6μ
R641 4.7
-8.6V
B CMD
+5V
A CMD TO (A8)-13
U641 AUTO H GK13368
L640 5.6μH
R640 4.7
+8.6V
FROM U803 ALT
ALT
TO (A8)-9
A GATE
TO (A8)-12
R660 330
R661 4.7
R630 100K
R649 4.7K
R650 4.99K ±1%
J345
P345
A SWEEP TO H PRE U901-27 (A8)-10
C1260 0.01
C603 270
R720 33
R648 100
U642 A SWEEP GK13378
TO U802 IA
TO U807 CA
C645 0.01
J702 W1206
DELAY TIME
TRG.D
LED
ASP
HOLD OFF
(A6)-9
R13 10K
R642 47
TO U808 CH
U742 B SWEEP GK13388
R750 4.99K ±1%
J347
P347
B SWEEP TO H PRE U901-26 (A8)-10
CB TO U814
IB TO U809
(A8)-11
C647 0.01
R652 10
U643B HD10131
R623 5.1K
B GATE TO Z DRIVE U1002-14 (A8)-13
MAG TO U901-17 (A8)-11
R610 4.7K
R611 3.3K
R613 620
R609 220
R617 22
R618 47
U605
U605HD 10107
C610 10μ 16V
C617 22
R612 1K
R614 1K
R616 2.2K
R619 10K
R622 2.2K
R615 100K
C625 10μ 16V
R621 68K
R721 180K
R627 50K
C606 0.01
R645 1.5K
R646 1K
U710 CMOS 4094BP
U643A HD10131
R643 13K
C1249 10μ 16V
R711 3.3K
X-Y (A8)-11
R709 220
R717 22
U705HD 10107
R713 620
R712 1K
C717 22
W1202 J702
SWP CLK
D0
D1
A8) ANALOG-1 P.B

A,B SWEEP (A8) 8

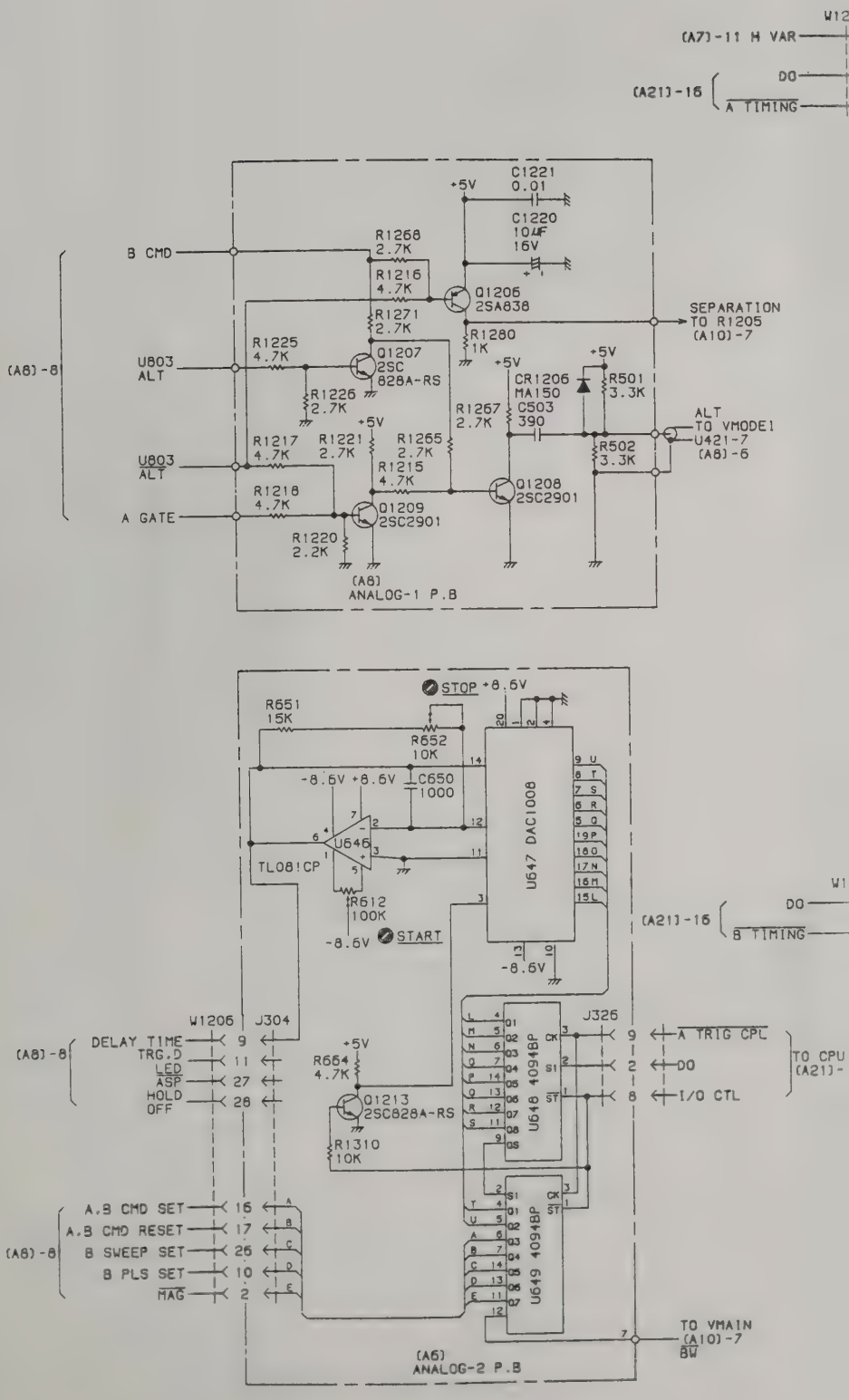
W12
(A7)-11 H VAR
DO
(A21)-16
A TIMING
C1221
0.01
+5V
C1220
10µF
16V
R1268
2.7K
B CMD
R1216
4.7K
Q1206
2SA838
R1271
2.7K
SEPARATION
TO R1205
(A10)-7
R1280
1K
+5V
R1225
4.7K
Q1207
2SC
828A-RS
U803
ALT
(A8)-8
R1226
2.7K
+5V
CR1206
MA150
R501
3.3K
R1267
2.7K
C503
390
ALT
TO VMODE1
U421-7
(A8)-6
R502
3.3K
+5V
R1217
4.7K
R1221
2.7K
R1265
2.7K
U803
ALT
R1215
4.7K
Q1208
2SC2901
R1218
4.7K
A GATE
Q1209
2SC2901
R1220
2.2K
(A8)
ANALOG-1 P.B
STOP +8.6V
R651
15K
R652
10K
-8.6V +8.6V
C650
1000
U646
TL081CP
U647 DAC1008
R612
100K
-8.6V
START
-8.6V
W1
DO
(A21)-16
B TIMING
W1206
J304
J326
DELAY TIME
TRG.D
LED
ASP
HOLD
OFF
(A8)-8
+5V
R664
4.7K
Q1213
2SC828A-RS
R1310
10K
U648 4094BP
U649 4094BP
A TRIG CPL
DO
I/O CTL
TO CPU
(A21)-
A,B CMD SET
A,B CMD RESET
B SWEEP SET
B PLS SET
MAG
(A8)-8
TO VMAIN
(A10)-7
BW
(A6)
ANALOG-2 P.B

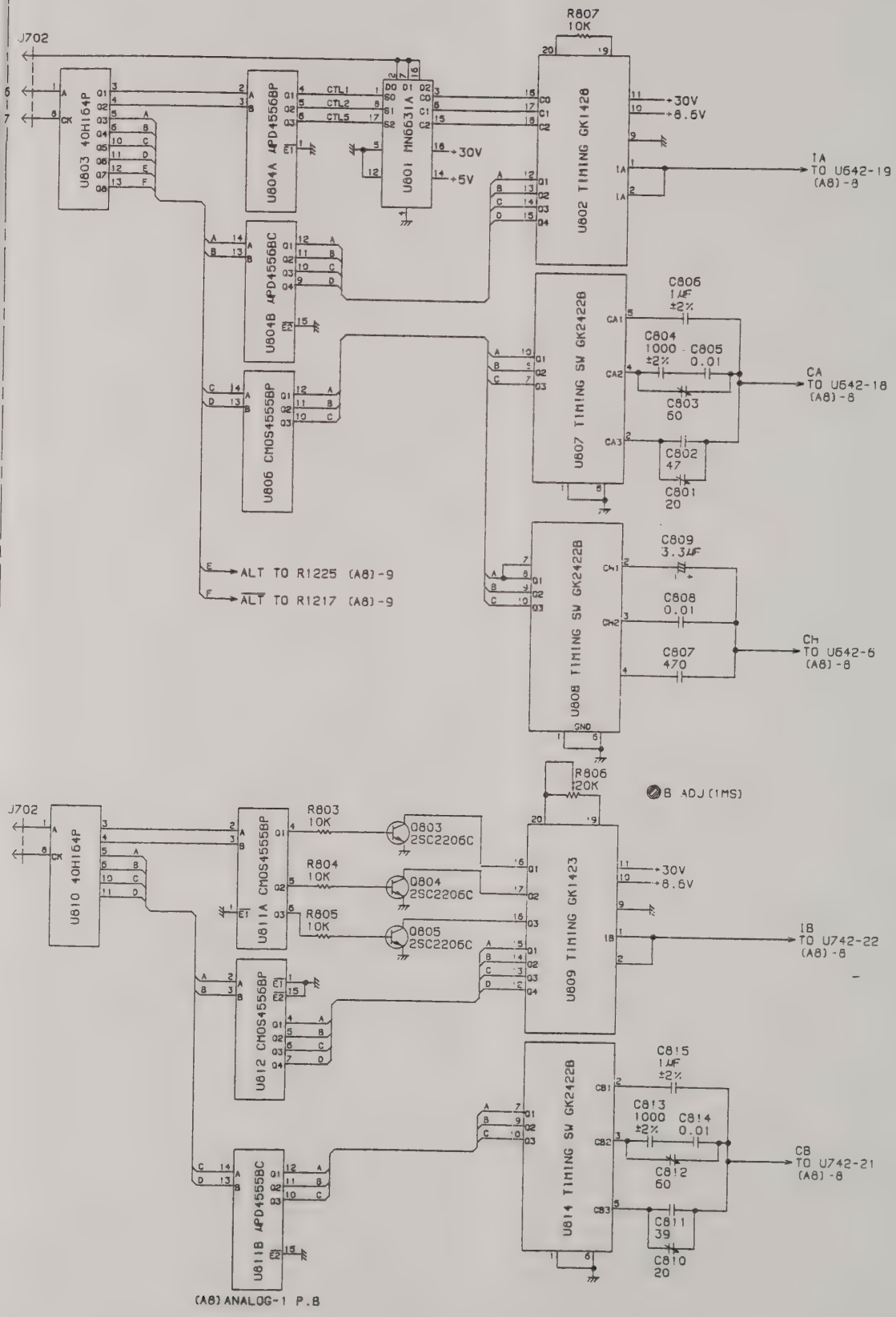

DELAY SWEEP & TIMING (A8-1) 9

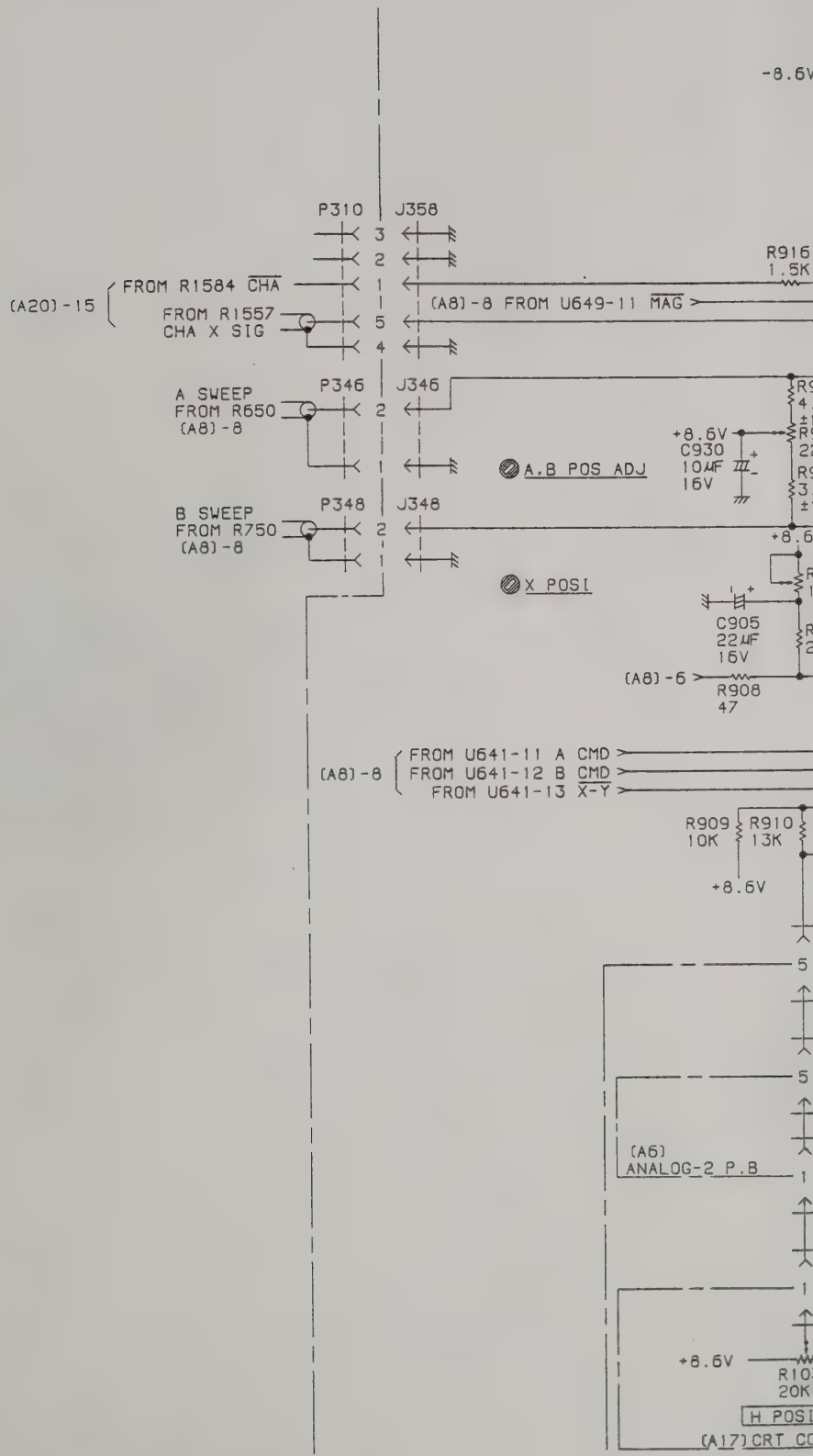
-8.6V
P310
J358
3
2
1
5
4
R916
1.5K
(A20)-15
FROM R1584 CHA
FROM R1557
CHA X SIG
(A8)-8 FROM U649-11 MAG
A SWEEP
FROM R650
(A8)-8
P346
J346
2
1
+8.6V
C930
10μF
16V
A,B POS ADJ
B SWEEP
FROM R750
(A8)-8
P348
J348
2
1
+8.6
X POSI
C905
22μF
16V
(A8)-6
R908
47
(A8)-8
FROM U641-11 A CMD
FROM U641-12 B CMD
FROM U641-13 X-Y
R909
10K
R910
13K
+8.6V
5
5
(A6)
ANALOG-2 P.B
1
1
+8.6V
H POSI
(A17) CRT C

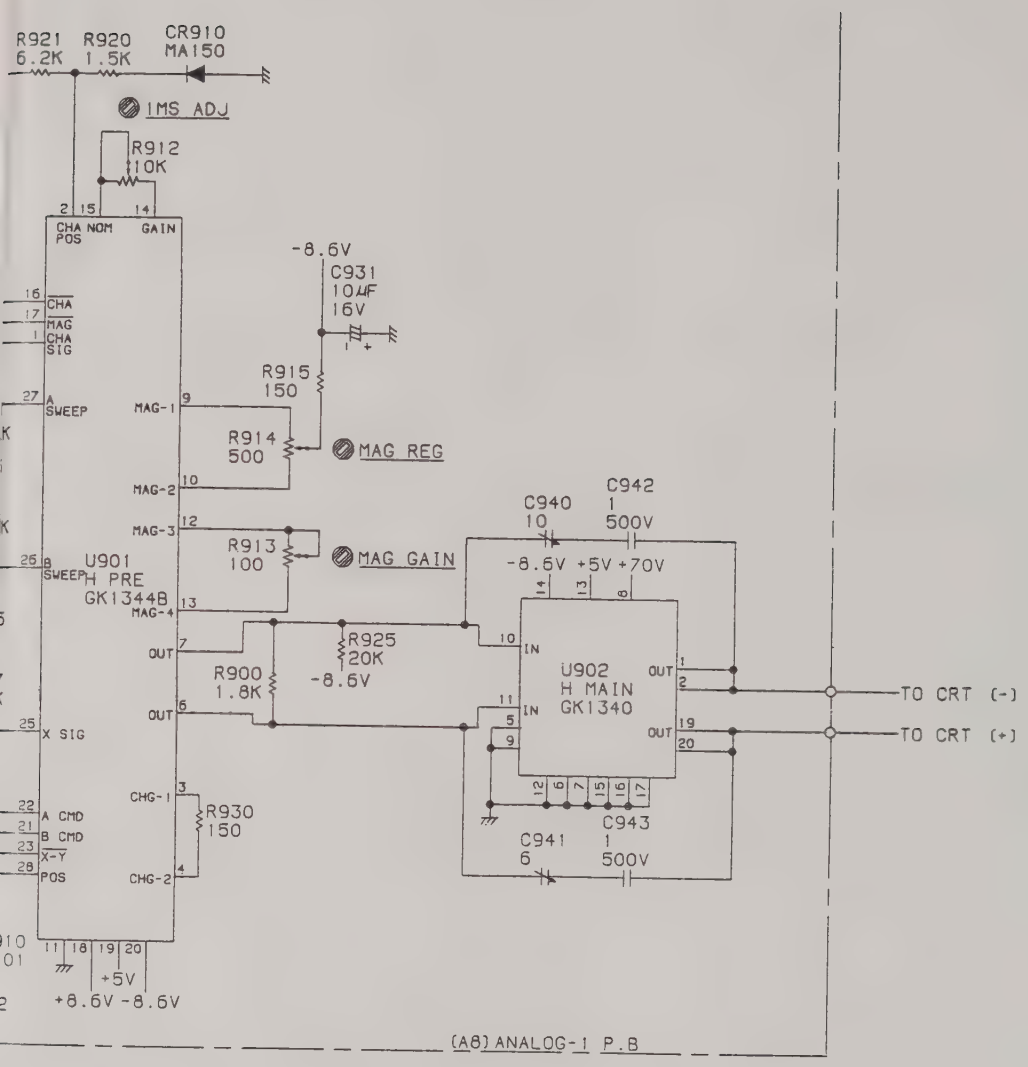
R921
6.2K
R920
1.5K
CR910
MA150
IMS ADJ
R912
10K
CHA POS
NOM
GAIN
-8.6V
C931
10μF
16V
R915
150
R914
500
MAG REG
R913
100
MAG GAIN
C940
10
C942
1
500V
-8.6V +5V +70V
U901
H PRE
GK1344B
U902
H MAIN
GK1340
R925
120K
R900
1.8K
-8.6V
R930
150
C941
6
C943
1
500V
TO CRT (-)
TO CRT (+)
+5V
+8.6V -8.6V
(A8) ANALOG-1 P.B

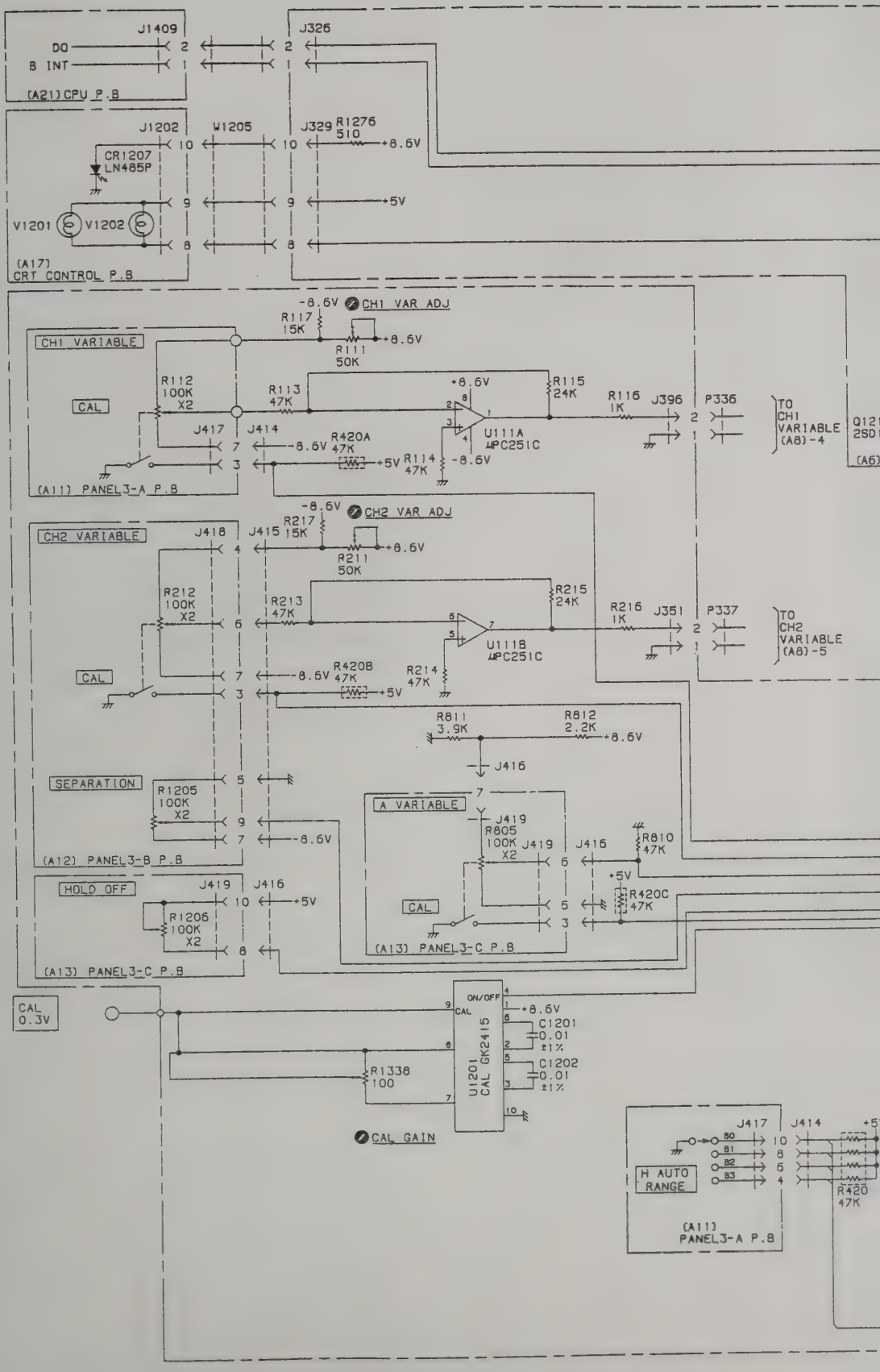
J1409
DO
B INT
(A21) CPU P.B
J326
J1202
W1205
J329
R1276
510
+8.6V
CR1207
LN485P
+5V
V1201
V1202
(A17)
CRT CONTROL P.B
-8.6V
CH1 VAR ADJ
R117
15K
R111
50K
CH1 VARIABLE
R112
100K
X2
CAL
R113
47K
R115
24K
R116
1K
J396
P336
TO
CH1
VARIABLE
(A8)-4
J417
J414
R420A
47K
U111A
μPC251C
R114
47K
(A11) PANEL3-A P.B
CH2 VAR ADJ
R217
15K
R211
50K
CH2 VARIABLE
J418
J415
R212
100K
X2
R213
47K
R215
24K
R216
1K
J351
P337
TO
CH2
VARIABLE
(A8)-5
U111B
μPC251C
R214
47K
R420B
47K
R811
3.9K
R812
2.2K
J416
SEPARATION
R1205
100K
X2
(A12) PANEL3-B P.B
A VARIABLE
J419
R805
100K
X2
R810
47K
R420C
47K
HOLD OFF
R1206
100K
X2
(A13) PANEL3-C P.B
CAL
0.3V
ON/OFF
C1201
0.01
±1%
C1202
0.01
±1%
R1338
100
U1201
CAL GK2415
CAL GAIN
H AUTO
RANGE
B0
B1
B2
B3
R420
47K

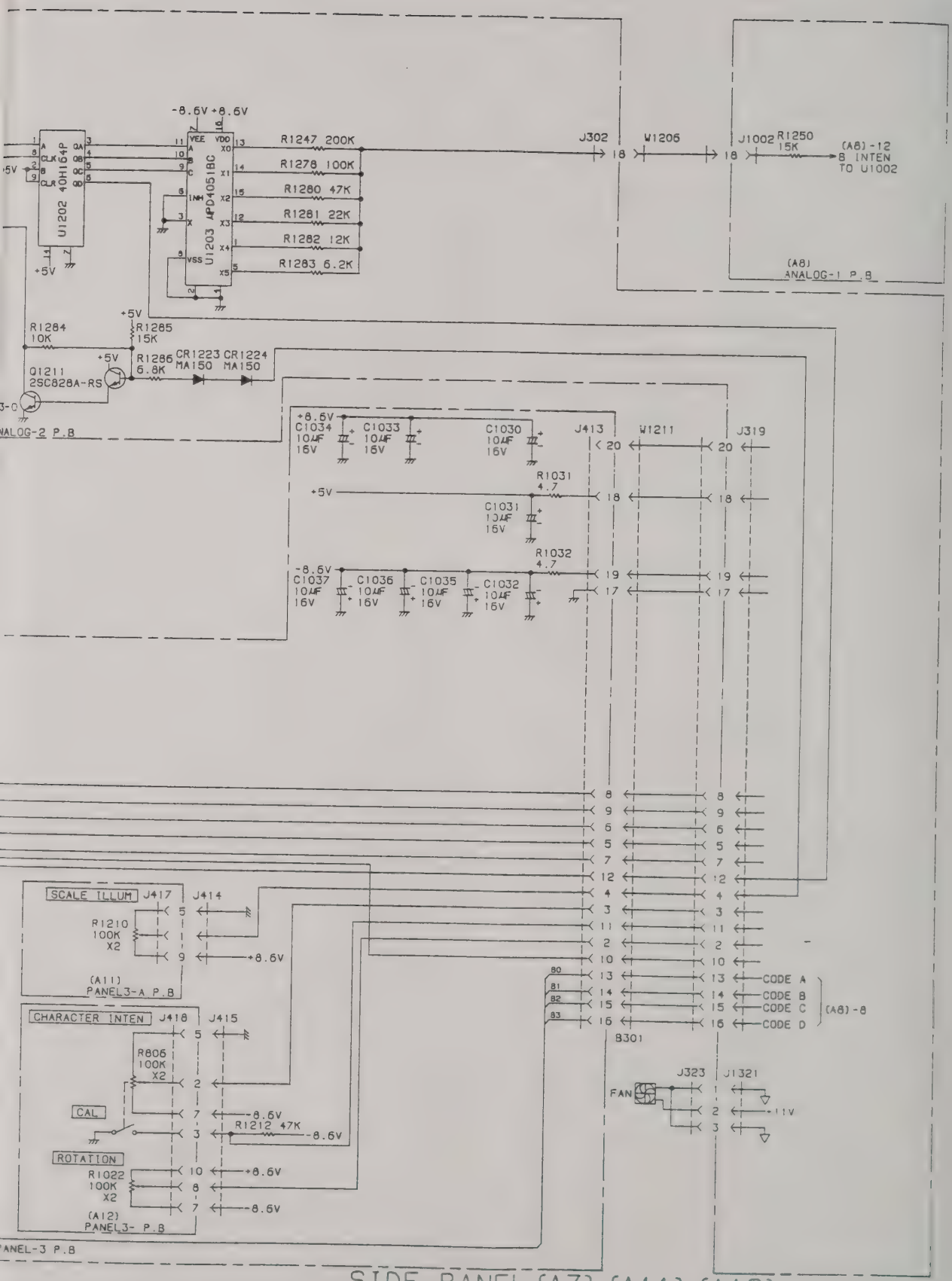

SIDE PANEL (A7) (A11) (A12)
(A6) (A13) (A17) 11

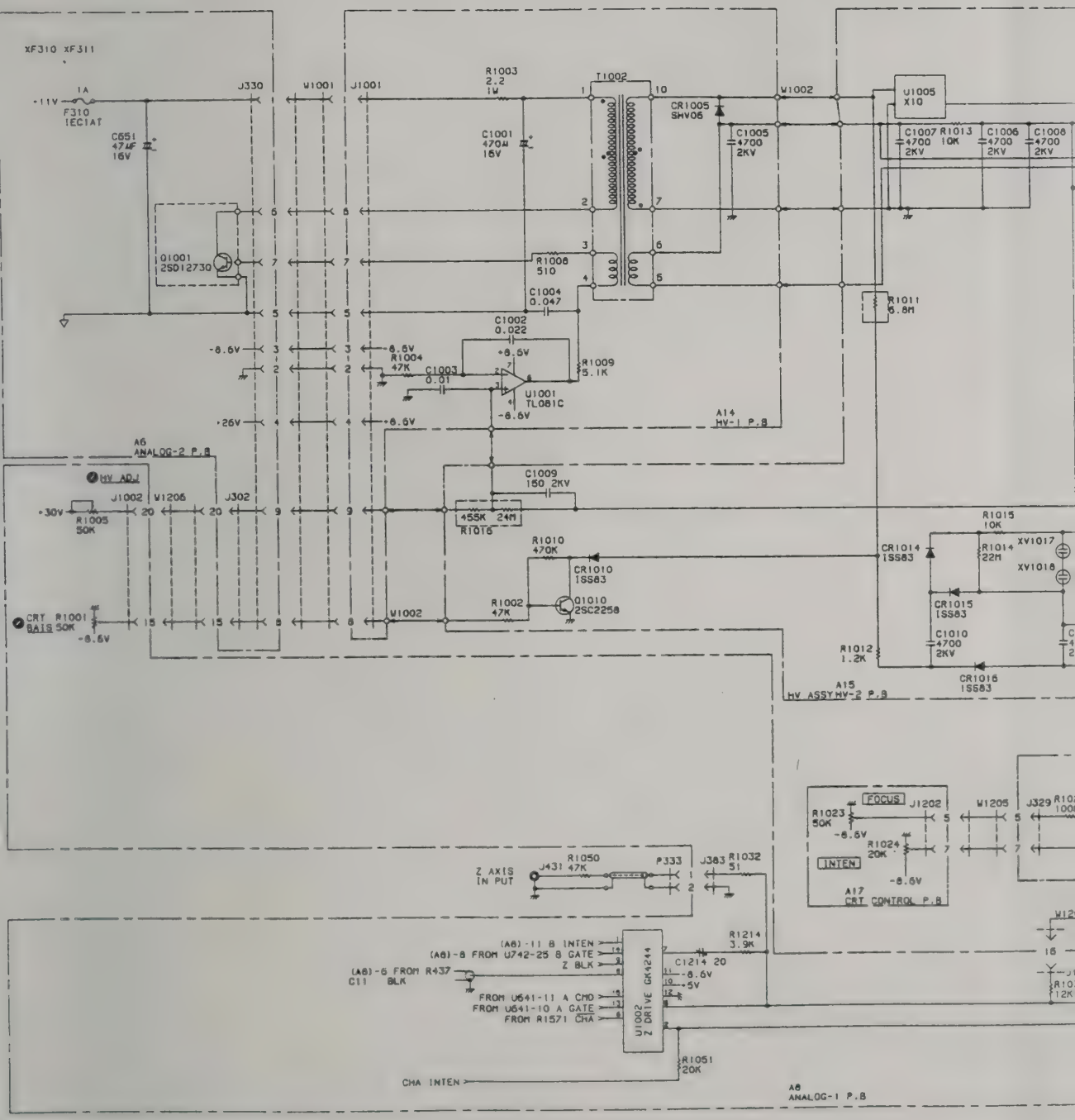
XF310 XF311
+11V
1A
F310
1EC1AT
J330
W1001
J1001
C651
47uF
16V
R1003
2.2
1W
T1002
C1001
470uF
16V
CR1005
SHV06
W1002
U1005
X10
C1005
4700
2KV
C1007
4700
2KV
R1013
10K
C1006
4700
2KV
C1008
4700
2KV
Q1001
2SD1273Q
R1006
510
C1004
0.047
R1011
6.8M
C1002
0.022
-8.6V
R1004
47K
C1003
0.01
R1009
5.1K
U1001
TL081C
+26V
A14
HV-1 P.B
A6
ANALOG-2 P.B
HV ADJ
J1002
W1205
J302
+30V
R1005
50K
C1009
150 2KV
R1016
455K 2M
R1010
470K
CR1010
1SS83
R1002
47K
Q1010
2SC2258
CRT R1001
BAIS 50K
R1015
10K
CR1014
1SS83
R1014
22M
XV1017
XV1018
CR1015
1SS83
C1010
4700
2KV
R1012
1.2K
CR1016
1SS83
A15
HV ASSY HV-2 P.B
FOCUS
J1202
R1023
50K
R1024
20K
INTEN
A17
CRT CONTROL P.B
Z AXIS
IN PUT
J431
R1050
47K
P333
J383
R1032
51
(A6)-11 B INTEN
(A6)-8 FROM U742-25 B GATE
Z BLK
(A6)-6 FROM R437
C11 BLK
FROM U641-11 A CMD
FROM U641-10 A GATE
FROM R1571 CHA
U1002
Z DRIVE GM4244
C1214 20
R1214
3.9K
-8.6V
-5V
R1051
20K
CHA INTEN
A6
ANALOG-1 P.B

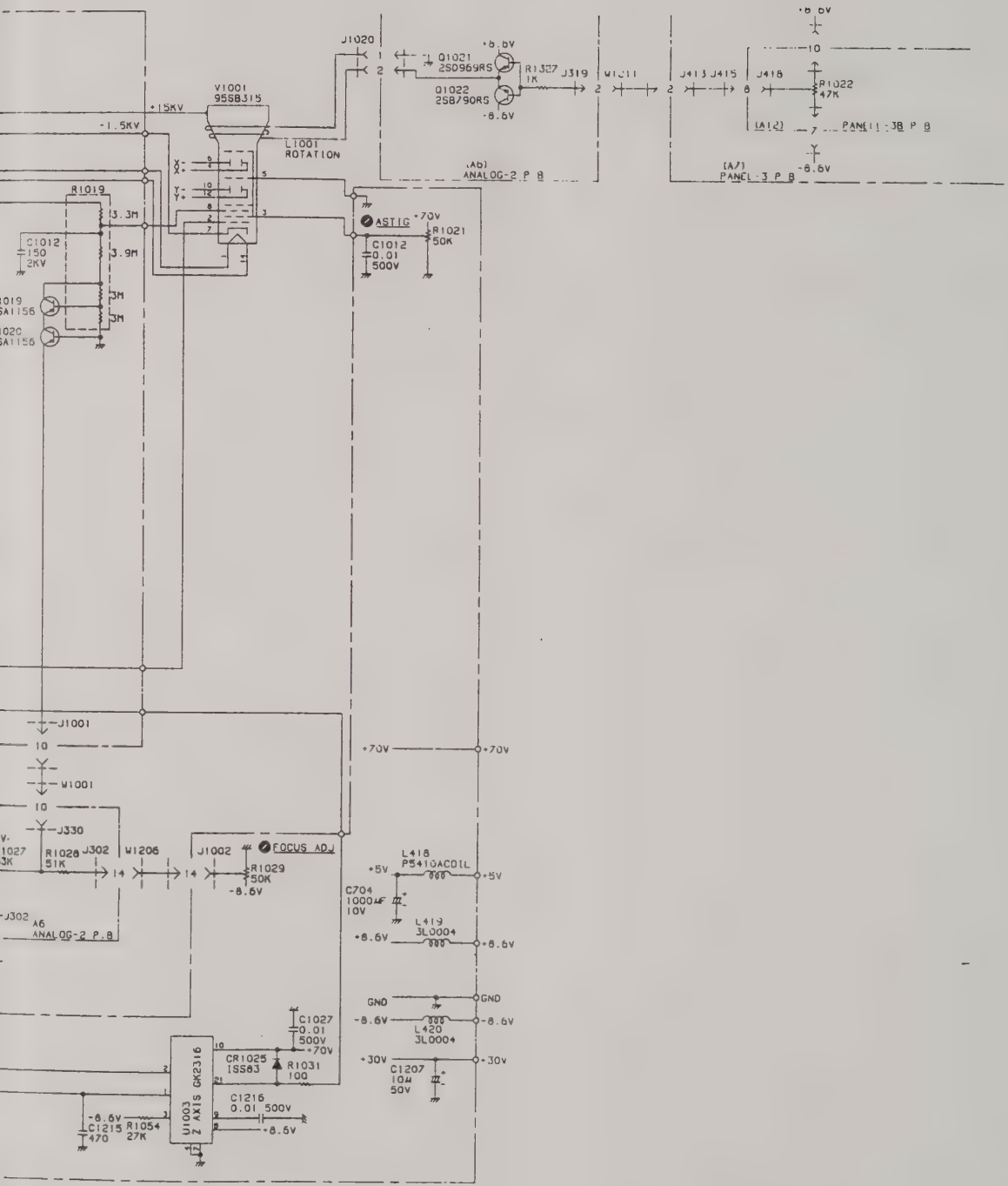

HV & Z AXIS (A8 A14 A15) 12

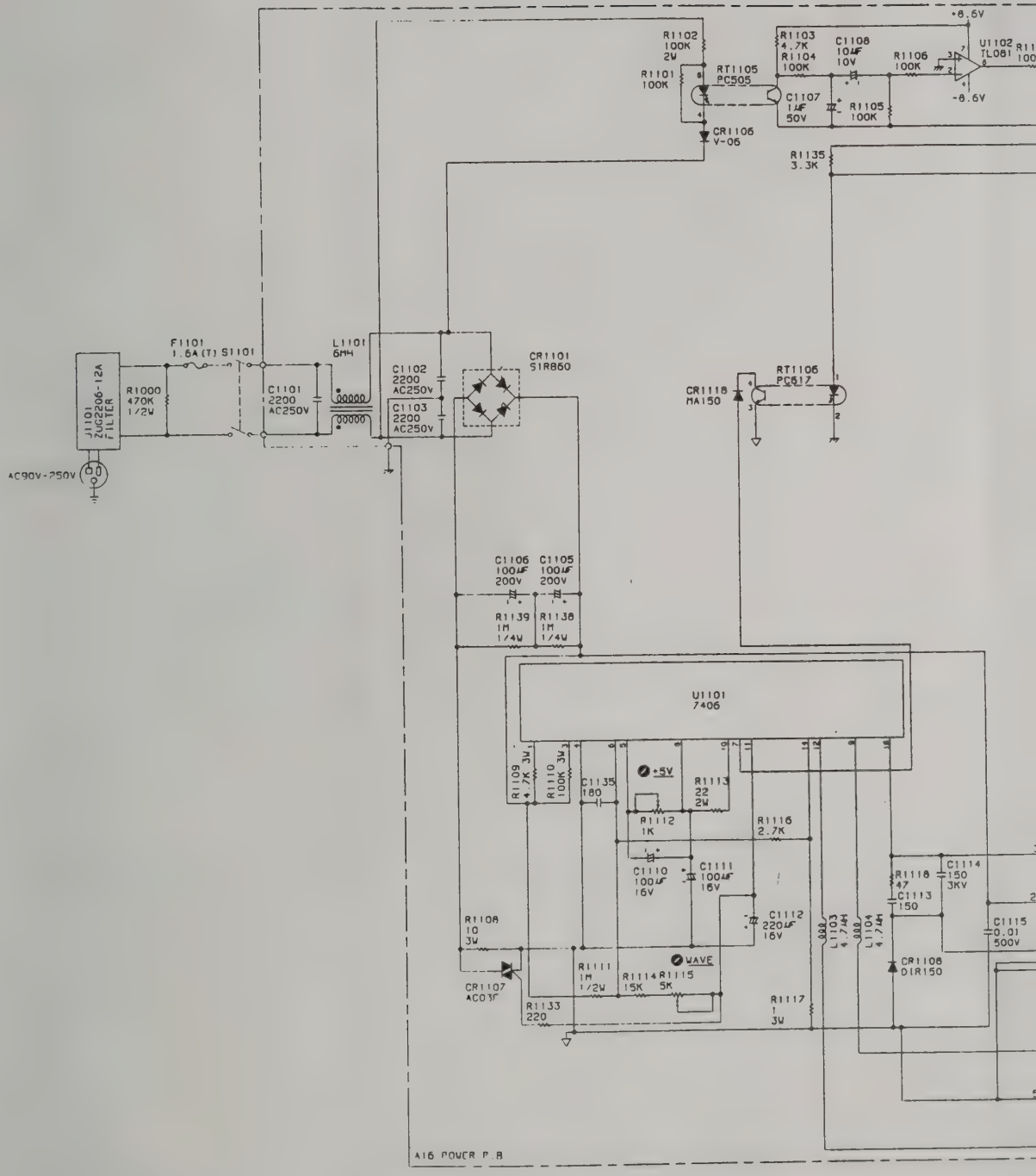
+8.6V
R1102 100K 2W
R1101 100K
RT1105 PC505
R1103 4.7K
R1104 100K
C1108 10μF 10V
R1106 100K
U1102 TL081
C1107 1μF 50V
R1105 100K
-8.6V
CR1106 V-06
R1135 3.3K
F1101 1.6A(T)
S1101
L1101 6MH
J1101 2UG2206-12A FILTER
R1000 470K 1/2W
C1101 2200 AC250V
C1102 2200 AC250V
C1103 2200 AC250V
CR1101 S1R860
AC90V-250V
CR1118 MA150
RT1106 PC617
C1106 100μF 200V
C1105 100μF 200V
R1139 1M 1/4W
R1138 1M 1/4W
U1101 7406
R1109 4.7K 3W
R1110 100K 3W
C1135 180
+5V
R1113 22 2W
R1112 1K
R1116 2.7K
C1110 100μF 16V
C1111 100μF 16V
C1112 220μF 16V
R1108 10 3W
CR1107 AC03F
R1111 1M 1/2W
R1114 15K
R1115 5K
WAVE
R1133 220
R1117 1 3W
R1118 47
C1113 150
C1114 150 3KV
C1115 0.01 500V
L1103 4.7μH
L1104 4.7μH
CR1108 DIR150
A16 POWER P.B

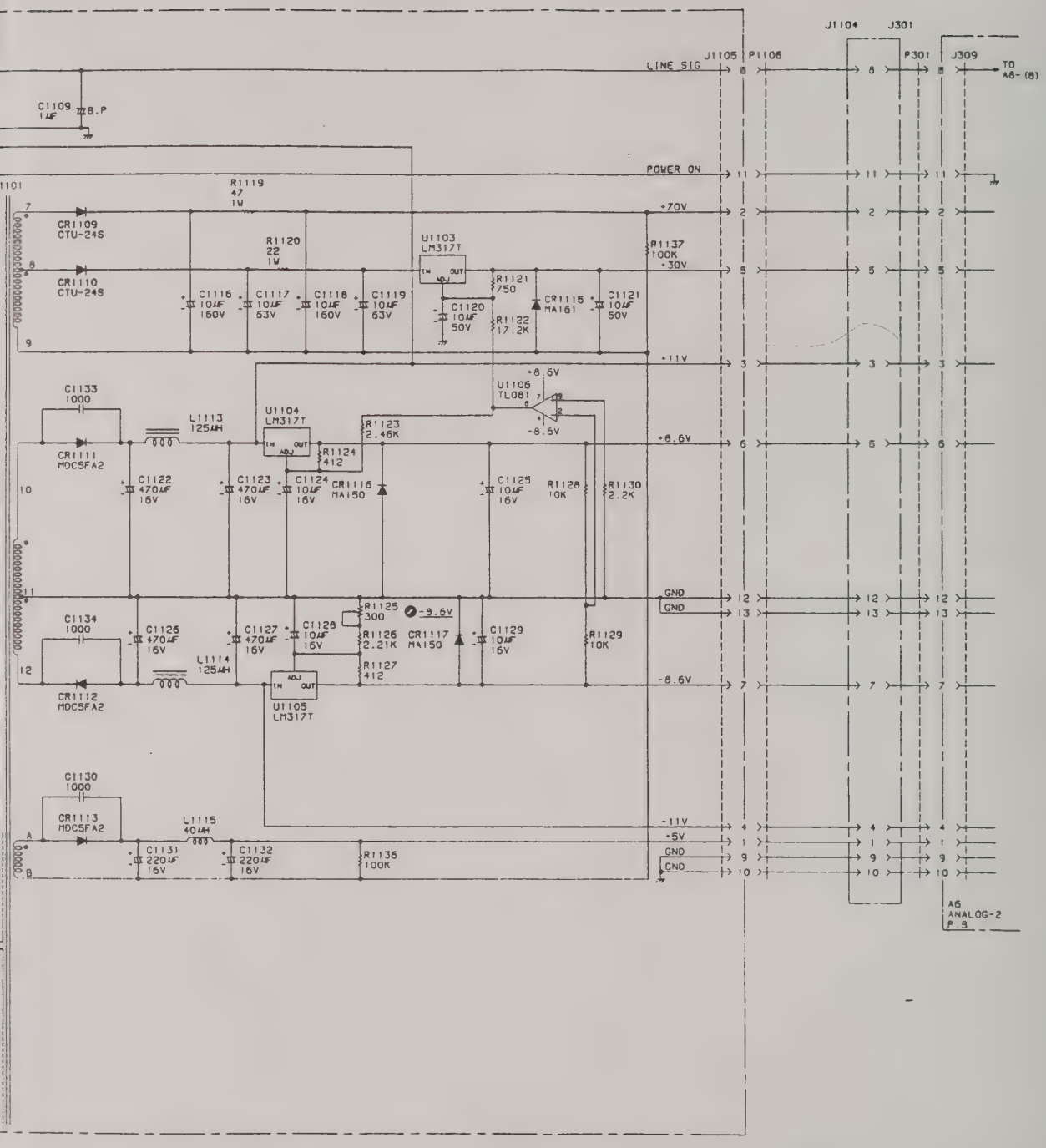
J1104
J301
J1105
P1106
P301
J309
LINE SIG
TO A8- (8)
POWER ON
+70V
+30V
+11V
+8.6V
GND
GND
-8.6V
-11V
+5V
GND
GND
C1109 1µF
CR1109 CTU-24S
CR1110 CTU-24S
R1119 47 1W
R1120 22 1W
U1103 LM317T
R1137 100K
C1116 10µF 160V
C1117 10µF 63V
C1118 10µF 160V
C1119 10µF 63V
C1120 10µF 50V
R1121 750
R1122 17.2K
CR1115 MA161
C1121 10µF 50V
U1106 TL081
C1133 1000
CR1111 MDC5FA2
L1113 125µH
U1104 LM317T
R1123 2.46K
R1124 412
C1122 470µF 16V
C1123 470µF 16V
C1124 10µF 16V
CR1116 MA150
C1125 10µF 16V
R1128 10K
R1130 2.2K
C1134 1000
CR1112 MDC5FA2
C1126 470µF 16V
C1127 470µF 16V
C1128 10µF 16V
R1125 300
R1126 2.21K
CR1117 MA150
C1129 10µF 16V
R1129 10K
L1114 125µH
R1127 412
U1105 LM317T
C1130 1000
CR1113 MDC5FA2
L1115 40µH
C1131 220µF 16V
C1132 220µF 16V
R1136 100K
A6 ANALOG-2 P.3

POWER (A16) 13

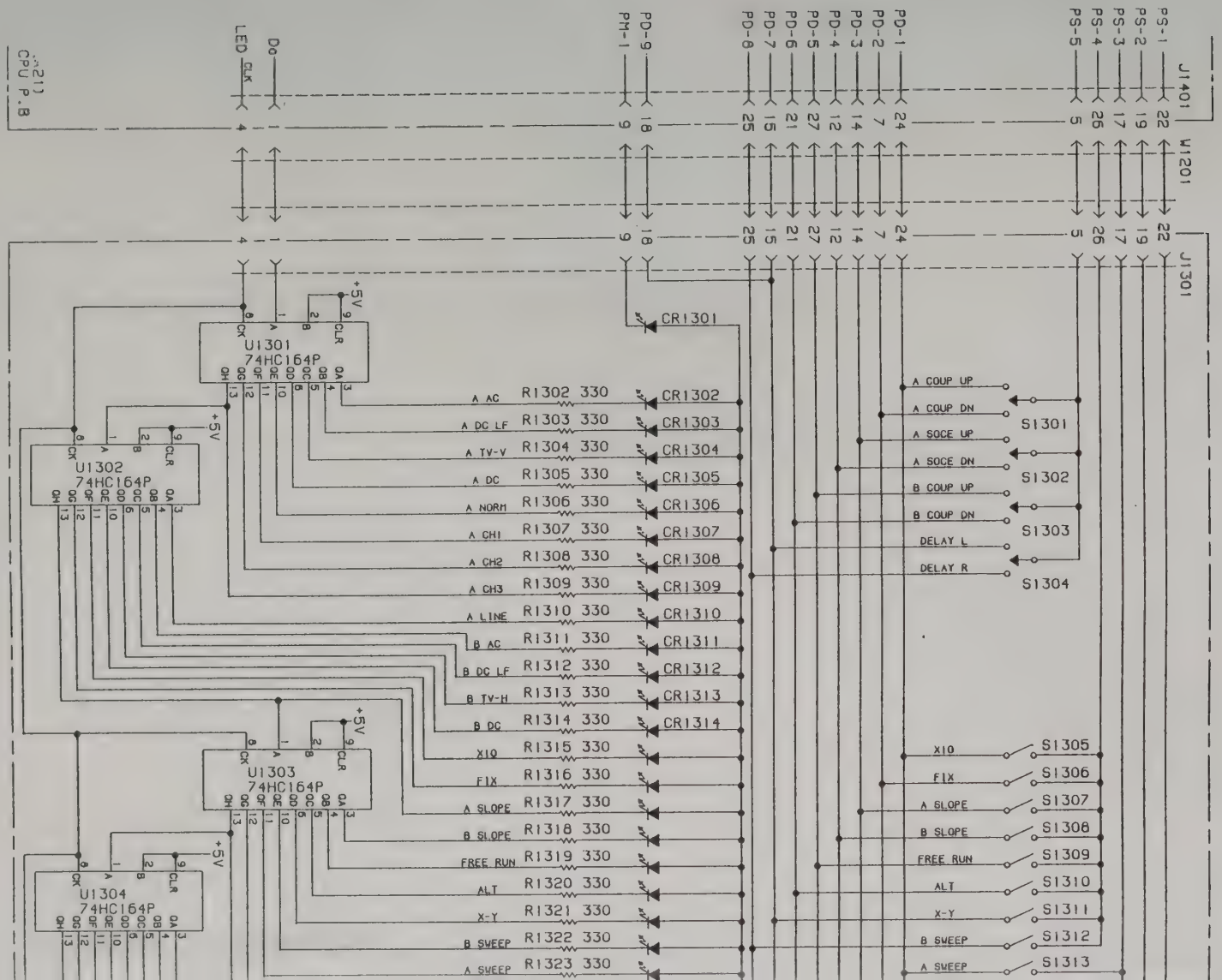
(211)
CPU P.B
LED CLK
Do
PM-1
PD-9
PD-8
PD-7
PD-6
PD-5
PD-4
PD-3
PD-2
PD-1
PS-5
PS-4
PS-3
PS-2
PS-1
J1401
W1201
J1301
CR1301
U1301
74HC164P
U1302
74HC164P
U1303
74HC164P
U1304
74HC164P
+5V
A AC R1302 330 CR1302
A DC LF R1303 330 CR1303
A TV-V R1304 330 CR1304
A DC R1305 330 CR1305
A NORM R1306 330 CR1306
A CH1 R1307 330 CR1307
A CH2 R1308 330 CR1308
A CH3 R1309 330 CR1309
A LINE R1310 330 CR1310
B AC R1311 330 CR1311
B DC LF R1312 330 CR1312
B TV-H R1313 330 CR1313
B DC R1314 330 CR1314
X10 R1315 330
FIX R1316 330
A SLOPE R1317 330
B SLOPE R1318 330
FREE RUN R1319 330
ALT R1320 330
X-Y R1321 330
B SWEEP R1322 330
A SWEEP R1323 330
A COUP UP
A COUP DN
A SOCE UP
A SOCE DN
B COUP UP
B COUP DN
DELAY L
DELAY R
S1301
S1302
S1303
S1304
X10 S1305
FIX S1306
A SLOPE S1307
B SLOPE S1308
FREE RUN S1309
ALT S1310
X-Y S1311
B SWEEP S1312
A SWEEP S1313

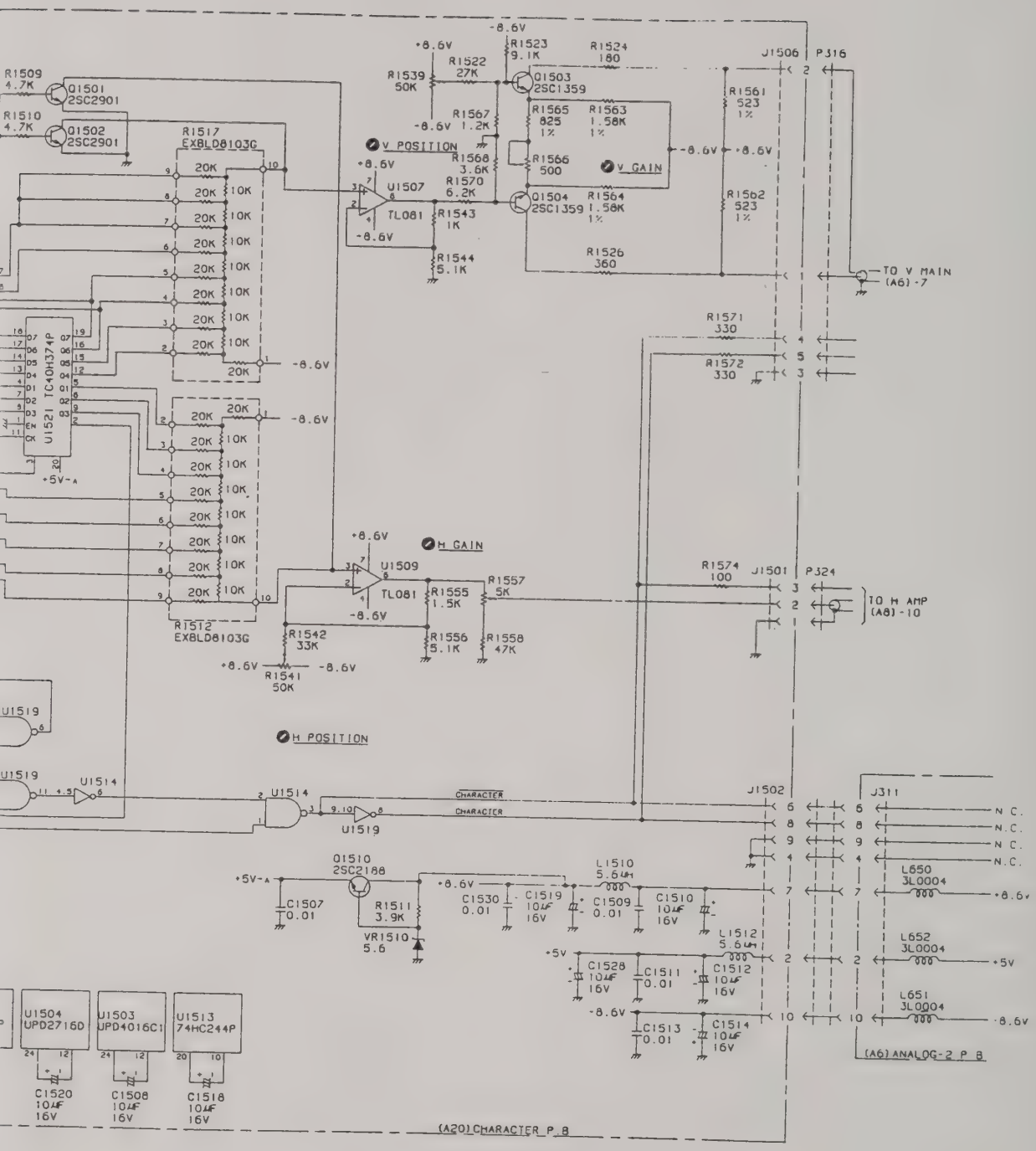
R1509 4.7K
Q1501 2SC2901
R1510 4.7K
Q1502 2SC2901
R1517 EXBLD8103G
U1521 TC40H374P
+5V-A
-8.6V
+8.6V
R1523 9.1K
R1524 180
R1522 27K
R1539 50K
Q1503 2SC1359
R1567 1.2K
R1565 825 1%
R1563 1.58K 1%
R1561 523 1%
V POSITION
R1568 3.6K
R1566 500
V GAIN
R1570 6.2K
U1507 TL081
R1543 1K
Q1504 2SC1359
R1564 1.58K 1%
R1562 523 1%
R1544 5.1K
R1526 360
J1506
P316
TO V MAIN (A6)-7
R1571 330
R1572 330
H GAIN
U1509 TL081
R1555 1.5K
R1557 5K
R1574 100
J1501
P324
TO H AMP (A8)-10
R1512 EXBLD8103G
R1542 33K
R1556 5.1K
R1558 47K
R1541 50K
H POSITION
U1519
U1514
CHARACTER
J1502
J311
N.C.
L650 3L0004
L652 3L0004
L651 3L0004
Q1510 2SC2188
C1507 0.01
R1511 3.9K
VR1510 5.6
C1530 0.01
C1519 10µF 16V
C1509 0.01
C1510 10µF 16V
L1510 5.6µH
L1512 5.6µH
C1528 10µF 16V
C1511 0.01
C1512 10µF 16V
C1513 0.01
C1514 10µF 16V
U1504 UPD27160
U1503 UPD4016C1
U1513 74HC244P
C1520 10µF 16V
C1508 10µF 16V
C1518 10µF 16V
(A6) ANALOG-2 P B
(A20) CHARACTER P B

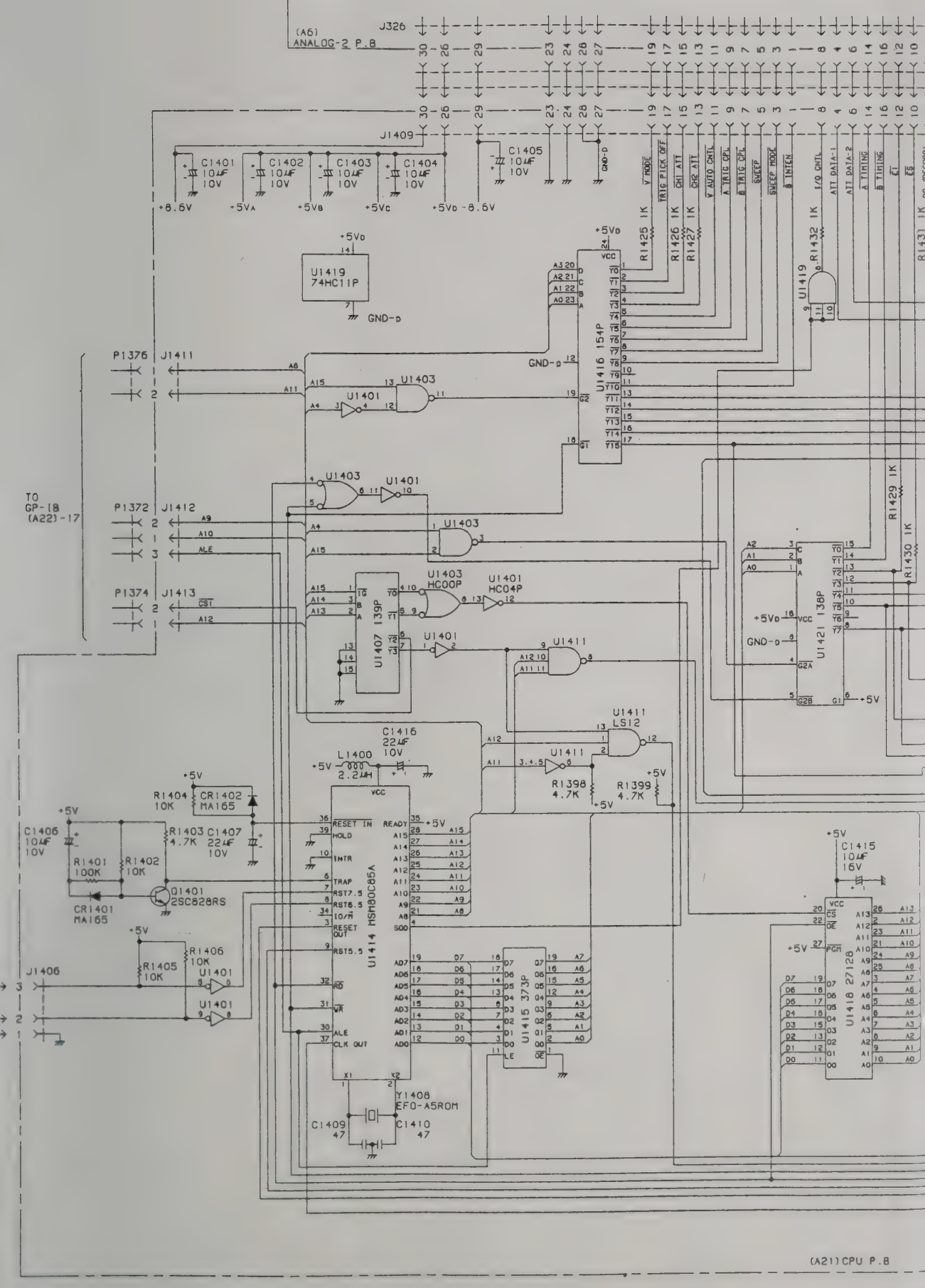
(A6) ANALOG-2 P.8
J326
J1409
C1401 10μF 10V
C1402 10μF 10V
C1403 10μF 10V
C1404 10μF 10V
C1405 10μF 10V
+8.6V
+5VA
+5VB
+5VC
+5VD -8.6V
GND-D
U1419 74HC11P
+5VD
R1425 1K
R1426 1K
R1427 1K
R1432 1K
R1429 1K
R1430 1K
V MODE
TRIG PICK OFF
CH1 ATT
CH2 ATT
V AUTO CNTL
A TRIG CPL
B TRIG CPL
SWEEP
SWEEP MODE
B INTEN
I/O CNTL
ATT DATA-1
ATT DATA-2
A TIMING
B TIMING
CS
U1416 154P
U1403
U1401
P1376 J1411
P1372 J1412
P1374 J1413
TO GP-IB (A22)-17
A9
A10
ALE
CST
A12
U1407 139P
U1403 HC00P
U1401 HC04P
U1411
U1421 138P
+5V
C1416 22μF 10V
L1400 2.2μH
U1411 LS12
R1398 4.7K
R1399 4.7K
R1404 10K
CR1402 MA165
C1406 10μF 10V
R1403 4.7K
C1407 22μF 10V
R1401 100K
R1402 10K
Q1401 2SC828RS
CR1401 MA165
R1405 10K
R1406 10K
J1406
U1414 MSM80C85A
RESET IN
HOLD
INTR
TRAP
RST7.5
RST6.5
IO/M
RESET OUT
RST5.5
RD
WR
ALE
CLK OUT
READY
SOD
U1415 373P
Y1408 EFO-A5ROM
C1409 47
C1410 47
C1415 10μF 16V
U1418 27128
(A21) CPU P.8

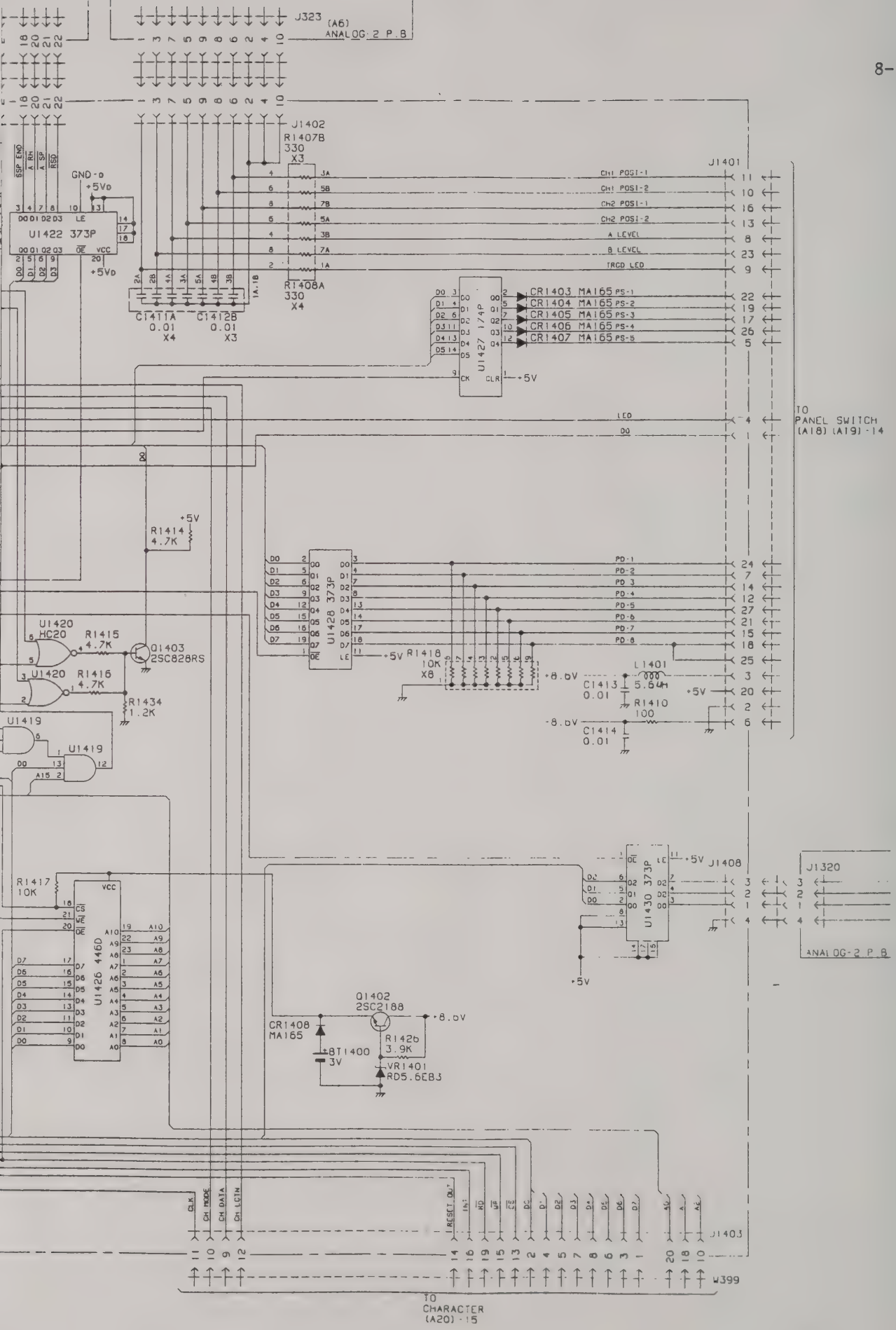
J323 (A6) ANALOG-2 P.B
J1402
R1407B 330 X3
R1408A 330 X4
C1411A 0.01 X4
C1412B 0.01 X3
U1422 373P
GND-D
+5VD
J1401
CH1 POSI-1
CH1 POSI-2
CH2 POSI-1
CH2 POSI-2
A LEVEL
B LEVEL
TRGD LED
U1427 1/4P
CR1403 MA165 PS-1
CR1404 MA165 PS-2
CR1405 MA165 PS-3
CR1406 MA165 PS-4
CR1407 MA165 PS-5
+5V
LED
DO
TO PANEL SWITCH (A18) (A19)-14
R1414 4.7K
U1428 373P
PD-1
PD-2
PD-3
PD-4
PD-5
PD-6
PD-7
PD-8
R1418 10K X8
+8.6V
L1401 5.6uH
C1413 0.01
R1410 100
-8.6V
C1414 0.01
U1420 HC20
R1415 4.7K
Q1403 2SC828RS
R1416 4.7K
R1434 1.2K
U1419
A15
R1417 10K
U1426 446D
U1430 373P
J1408
J1320
ANALOG-2 P.B
Q1402 2SC2188
CR1408 MA165
BT1400 3V
R1426 3.9K
VR1401 RD5.6EB3
CLK
CH MODE
CH DATA
CH LETN
RESET OUT
J1403
U399
TO CHARACTER (A20)-15

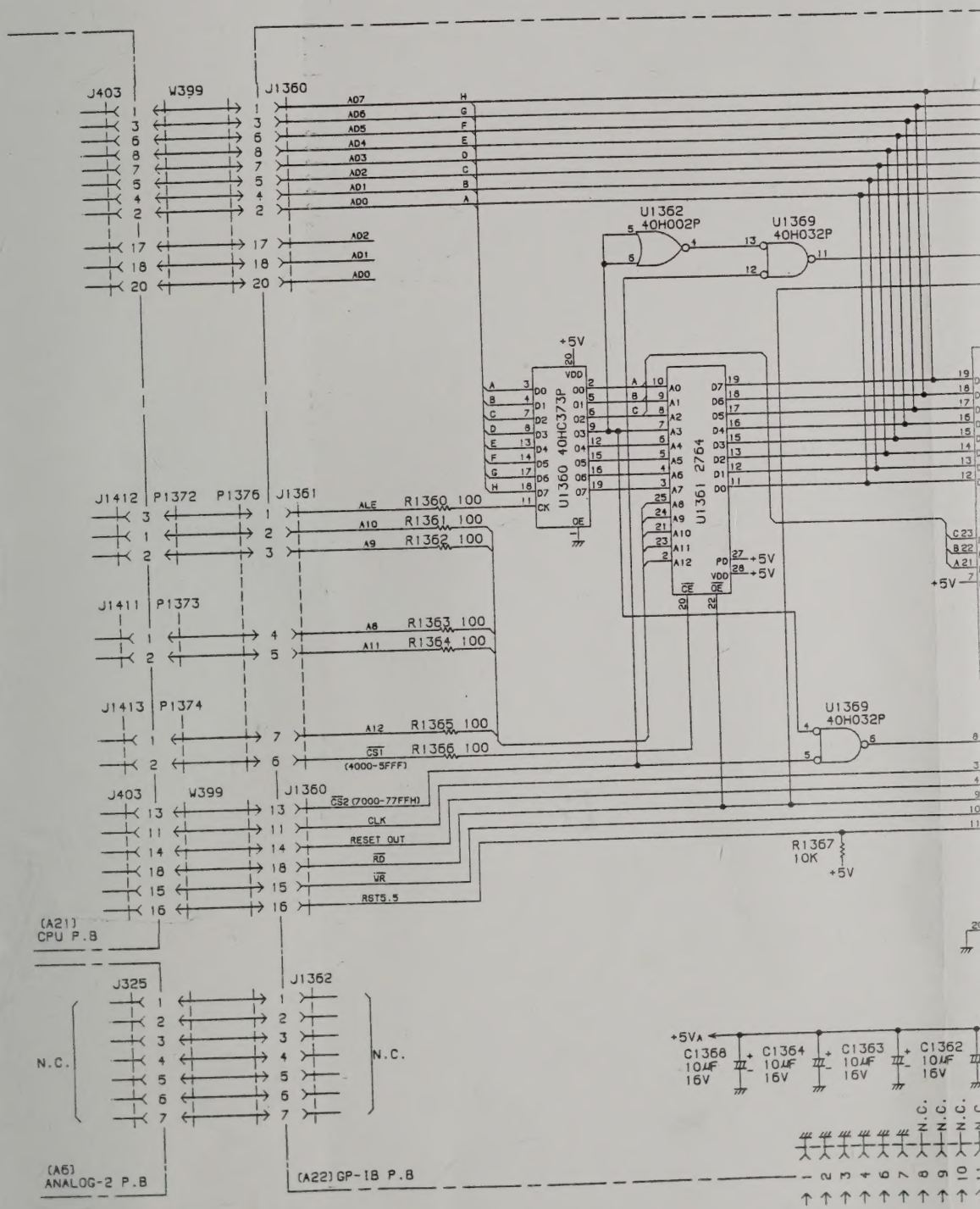
J403
W399
J1360
AD7
AD6
AD5
AD4
AD3
AD2
AD1
AD0
U1362
40H002P
U1369
40H032P
+5V
U1360 40HC373P
U1361 2764
J1412
P1372
P1376
J1361
ALE
A10
A9
R1360 100
R1361 100
R1362 100
J1411
P1373
A8
A11
R1363 100
R1364 100
J1413
P1374
A12
CS1
R1365 100
R1366 100
(4000-5FFF)
J403
W399
J1360
CS2 (7000-77FFH)
CLK
RESET OUT
RD
WR
RST5.5
R1367
10K
+5V
(A21)
CPU P.B
J325
J1362
N.C.
N.C.
(A6)
ANALOG-2 P.B
(A22) GP-1B P.B
+5VA
C1368
10μF
16V
C1364
10μF
16V
C1363
10μF
16V
C1362
10μF
16V
N.C.
N.C.
N.C.

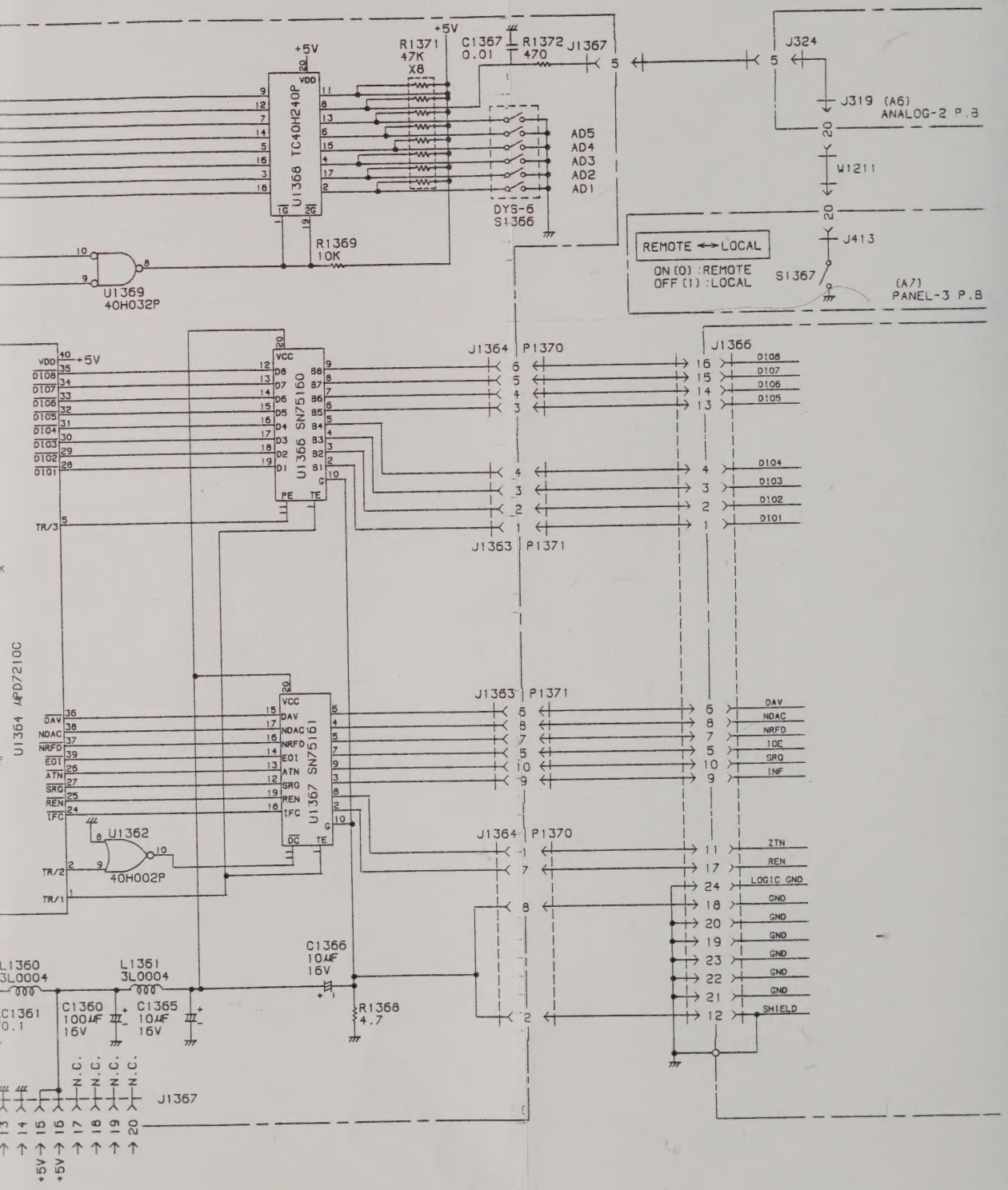
+5V
R1371
47K
X8
C1367
0.01
R1372
470
J1367
J324
J319 (A6)
ANALOG-2 P.B
W1211
U1368 TC40H240P
AD5
AD4
AD3
AD2
AD1
DYS-6
S1366
R1369
10K
REMOTE ↔ LOCAL
ON (0) :REMOTE
OFF (1) :LOCAL
S1367
J413
(A7)
PANEL-3 P.B
U1369
40H032P
J1364 P1370
J1366
D108
D107
D106
D105
D104
D103
D102
D101
U1366 SN75160
J1363 P1371
TR/3
U1364 μPD7210C
U1367 SN75161
DAV
NDAC
NRFD
EOI
ATN
SRQ
REN
IFC
U1362
40H002P
TR/2
TR/1
ZTN
INF
LOGIC GND
GND
SHIELD
C1366
10μF
16V
L1360
3L0004
L1361
3L0004
C1360
100μF
16V
C1365
10μF
16V
C1361
0.1
R1368
4.7
N.C.
J1367